Bearings | Link-Belt® Large Bore

REXNORD

Large Bore Nomenclature

P LB 222 44 K C 71516

Symbol	Description
P	Pillow block; two piece
PK	Pillow block; two piece cast steel
LB	Spherical Roller Bearing
222	Direct shaft mounted with 22200LB bearing
223	Direct shaft mounted with 22300LB bearing
225	Adapter mounted with 22200LBK bearing
226	Adapter mounted with 22300LBK bearing
230	Adapter or direct shaft mounted with 23000 bearing
231	Adapter or direct shaft mounted with 23100 bearing
232	Adapter or direct shaft mounted with 23200 bearing
44	One-fifth bearing bore diameter in mm
K	Tapered bore bearing
C	End closure
71516	7 15/16" – shaft size

22200,22300,23000, 23100, 23200,23900 Nomenclature

2 22 16 LB K / W33 / C0 / C40/ W4

Symbol	Description
2	Used to distinguish from other series
22	Bearing dimension series (22, 23, 30, 31, 32, 39)
16	One-fifth of bore diameter (mm)
LB	Designation for Link-Belt spherical roller bearing
None	Cylindrical bore
K	Tapered bore
W33	Lubrication holes and groove in outer ring (standard)
C2	Internal clearance less than C0
C0	Basic internal clearance
C3	Internal clearance greater than C0 (standard)
C4	Internal clearance greater than C3
W22	Reduced O.D. tolerance in center of standard tolerance range
C40	Reduced O.D. tolerance on high side
C50	Reduced O.D. tolerance on low side
W4	Inner ring marked to show high point of eccentricity

Series 22200,22300, and 23000

To select a pillow block, determine the applied radial load, the applied thrust load, the desired Rating Life, the required minimum shaft size, and applicable operating conditions. The procedure shown here will aid in selecting a pillow block to meet an L_{10} design life. The formulas for calculating life expectancy should be used to determine the Rating Life L_{10} for the pillow block selected. Because a number of series are available, several different pillow blocks that will fulfill and L_{10} life requirement can often be chosen.

Some of the factors to consider when choosing between series are: cost, speed limit, minimum shaft diameter, thrust load, space limitations, and type of shaft mounting.

The selection procedures and rating formulas shown here are in agreement with The American Bearing Manufacturers Association Standards and ANSI/ ABMA Standards STD 11-1990. Ratings are based on fatigue life.

The Rating Life L_{10} or fatigue life at 90% reliability is the usual basis for bearing selection.

For radial load applications only, Table 3 can be used to select a unit or to determine L_{10} life expectancy.

To assure a satisfactory bearing application, fitting practice, mounting, lubrication, sealing, static rating, housing strength, operating conditions and maintenance must be considered.

Selection

Step 1

Determine an appropriate L_{10} design life.

Type of service	Operating time, hours per year	Design life, years	L_{10} design life, hours
Heavy seasonal usage	1,400 to 1,600	4-6	8,000
Industrial—8 hour shift	2,000	10	20,000
Industrial—16 hour shift	4,000	10	40,000
Industrial—continuous	8,700	10	80,000 to 100,000
Industrial—High reliability	—	—	120,000 to 300,000

Step 2

Determine a required $\left(\frac{C}{P}\right)$ from Table 1.

Step 3

Calculate the required C and select a roller bearing pillow block.

a For radial load only: P = Fr

Required C = $\left(\frac{C}{P}\right)$ P using $\left(\frac{C}{P}\right)$ from Step 2

Select a roller bearing pillow block from Table 2 or Table 4 having a basic load rating C equal to or greater than the required C.

b For combined radial and thrust loads:

Select a roller bearing pillow block of the desired shaft size from Table 2 or Table 4 Calculate the ratio of thrust load F_a to the radial load F_r.

$$\frac{F_a}{F_r}$$

Calculate the equivalent radial load P

$$P = XF_r + YF_a$$

If $\frac{F_a}{F_r}$ is equal to or less than e, then $P = X_1F_r + Y_1F_a$

If $\frac{F_a}{F_r}$ is greater than e, then $P = X_2F_r + Y_2F_a$

For values of e, X_1, Y_1, X_2, and Y_2, see Table 2 or Table 4

Required C = $\left(\frac{C}{P}\right)$ P using $\left(\frac{C}{P}\right)$ from Step 2

Consult the bearing rating Table 2 or Table 4, to see if the selected bearing meets or exceeds the required C. The life expectancy of other sizes and series of bearings can be calculated similarly.

Selection

Symbols for formulas:

C = basic load rating, pounds (or newtons)
Co = static load rating, pounds (or newtons)
e = a reference value
Fa = thrust load, pounds (or newtons)
Fr = radial load, pounds (or newtons)
L_{10} = rating life, hours
n = speed, revolutions per minute
P = equivalent radial load, pounds (or newtons)
X = radial factor
Y = thrust factor

Table 1 • Relation of L_{10} life and speed to $\left(\frac{C}{P}\right)$

Bearing Life Hours L_{10}	Speed, N								
	50	100	200	300	400	500	600	700	800
3000	1.93	2.38	2.93	3.31	3.61	3.86	4.07	4.27	4.44
4000	2.11	2.59	3.19	3.61	3.93	4.20	4.44	4.65	4.84
5000	2.25	2.77	3.42	3.86	4.20	4.50	4.75	4.97	5.18
6000	2.38	2.93	3.61	4.07	4.44	4.75	5.02	5.25	5.47
8000	2.59	3.19	3.93	4.44	4.84	5.18	5.47	5.73	5.96
10000	2.77	3.42	4.20	4.75	5.18	5.54	5.85	6.12	6.37
12000	2.93	3.61	4.44	5.02	5.47	5.85	6.18	6.47	6.73
14000	3.07	3.78	4.65	5.25	5.73	6.12	6.47	6.77	7.05
16000	3.19	3.93	4.84	5.47	5.96	6.37	6.73	7.05	7.34
18000	3.31	4.07	5.02	5.66	6.18	6.60	6.97	7.30	7.60
20000	3.42	4.20	5.18	5.85	6.37	6.81	7.20	7.54	7.85
25000	3.65	4.50	5.54	6.25	6.81	7.29	7.70	8.06	8.39
30000	3.86	4.75	5.85	6.60	7.20	7.70	8.13	8.51	8.86
35000	4.04	4.97	6.12	6.92	7.54	8.06	8.51	8.92	9.28
40000	4.20	5.18	6.37	7.20	7.85	8.39	8.86	9.28	9.66
45000	4.36	5.36	6.60	7.46	8.13	8.69	9.18	9.61	10.00
50000	4.50	5.54	6.81	7.70	8.39	8.97	9.48	9.92	10.30
60000	4.75	5.85	7.20	8.13	8.86	9.48	10.00	10.50	10.90
70000	4.97	6.12	7.54	8.51	9.28	9.92	10.50	11.00	11.40
80000	5.18	6.37	7.85	8.86	9.66	10.30	10.90	11.40	11.90
90000	5.36	6.60	8.13	9.18	10.00	10.70	11.30	11.80	12.30
100000	5.54	6.81	8.39	9.48	10.30	11.00	11.70	12.20	12.70
150000	6.25	7.70	9.48	10.70	11.70	12.50	13.20	13.80	14.40
200000	6.81	8.39	10.30	11.70	12.70	13.60	14.40	15.00	15.70
	Speed, n								
	900	1000	1200	1500	1800	2400	3000	3600	6000
3000	4.60	4.75	5.02	5.36	5.66	6.18	6.60	6.97	8.13
4000	5.02	5.18	5.47	5.85	6.18	6.73	7.20	7.60	8.86
5000	5.36	5.54	5.85	6.25	6.60	7.20	7.70	8.13	9.48
6000	5.66	5.85	6.18	6.60	6.97	7.60	8.13	8.59	10.00
8000	6.18	6.37	6.73	7.20	7.60	8.29	8.86	9.36	10.90
10000	6.60	6.81	7.20	7.70	8.13	8.86	9.48	10.00	11.70
12000	6.97	7.20	7.60	8.13	8.59	9.36	10.00	10.60	12.30
14000	7.30	7.54	7.96	8.51	8.99	9.80	10.50	11.10	12.90
16000	7.60	7.85	8.29	8.86	9.36	10.20	10.90	11.50	13.40
18000	7.88	8.13	8.59	9.18	9.70	10.60	11.30	11.90	13.90
20000	8.13	8.39	8.86	9.48	10.00	10.90	11.70	12.30	14.40
25000	8.69	8.97	9.48	10.10	10.70	11.70	12.50	13.20	15.40
30000	9.18	9.48	10.00	10.70	11.30	12.30	13.20	13.90	16.20
35000	9.61	9.92	10.50	11.20	11.80	12.90	13.80	14.60	17.00
40000	10.00	10.30	10.90	11.70	12.30	13.40	14.40	15.20	17.70
45000	10.40	10.70	11.30	12.10	12.80	13.90	14.90	15.70	18.30
50000	10.70	11.00	11.70	12.50	13.20	14.40	15.40	16.20	18.90
60000	11.30	11.70	12.30	13.20	13.90	15.20	16.20	17.10	20.00
70000	11.80	12.20	12.90	13.80	14.60	15.90	17.00	17.90	20.90
80000	12.30	12.70	13.40	14.40	15.20	16.50	17.70	18.70	21.80
90000	12.80	13.20	13.90	14.90	15.70	17.10	18.30	19.40	22.60
100000	13.20	13.60	14.40	15.40	16.20	17.70	18.90	20.00	23.30
150000	14.90	15.40	16.20	17.30	18.30	20.00	21.40	22.60	26.30
200000	16.20	16.70	17.70	18.90	20.00	21.80	23.30	24.60	28.70

Basic Formula

$$\left(\frac{C}{P}\right) = \left(\frac{L_{10} \times n \times 60}{1{,}000{,}000}\right)^{3/10}$$

$$L_{10} = \frac{\left(\frac{C}{P}\right)^{10/3} \times 1{,}000{,}000}{n \times 60}$$

Life Expectancy

To calculate the Rating Life L_{10} of any selected or trial bearing:

Step 1

Determine the equivalent radial load P.

a For radial load only:

$$P = Fr$$

b For combined radial and thrust load:

$$P = XFr + YFa$$

if $\frac{Fa}{Fr}$ is equal to or less than e, then

$$P = X1Fr + Y1Fa$$

if $\frac{Fa}{Fr}$ is greater than e, then

$$P = X_2F_r + Y_2F_a$$

For values of e, X1, Y1, X2, and Y2, consult the appropriate bearing rating Table 2 Table 4.

Step 2

Calculate the ratio of the basic load rating C to the equivalent radial load.

$$\left(\frac{C}{P}\right)$$

Step 3

Approximate the bearing life from Table 1.

Live Adjustment

The Rating Life, L_{10}, may be modified for some applications in accordance with the formula

$$Ln = a_1a_2a_3L_{10}$$

where Ln = Adjusted life for (100-n) % reliablility,
a_1 = Life adjustment factor for reliability
a_2 = Life adjustment factor for material and processing
a_3= Life adjustment factor for operating conditions.

For most normal applications, all factors will be taken as 1, and the Rating Life used as the selection basis or life estimate. In addition, as long as standard catalog bearings are used, a_2 will be normally set equal to one.

The factor a_3 covers such things as lubrication, misalignment, and temperature. Some conditions that could yield a_3 significantly different than unity include speeds less than 20000 DN or greater than 200000 DN, temperatures below –40°F (–40°C) or above 275°F (135°C). For other possible conditions, as well as additional information on life adjustment factors, consult Rexnord Bearing Division.

Table 6 • Series 22200LB, 22200LBK Load Ratings and Speed Limits

Bearing Number		Co Static Load Rating		C Basic Load Rating		Speed Limit, rpm		e	$\frac{F_a}{F_r} \le e$		$\frac{F_a}{F_r} > e$	
Cylindrical Bore	Tapered bore	newtons	pounds	newtons	pounds	Grease	Oil		X1	Y1	X2	Y2
22209LB	22209LBK	105000	23600	92500	20800	5300	6200	0.26	1.00	2.6	0.67	3.9
22210LB	22210LBK	113000	25500	97900	22000	5000	5500	0.26	1.00	2.8	0.67	4.2
22211LB	22211LBK	145000	32500	120000	27000	4500	5000	0.23	1.00	2.9	0.67	4.4
22212LB	22212LBK	180000	40500	151000	34000	4000	4500	0.24	1.00	2.8	0.67	4.2
22213LB	22213LBK	207000	46500	169000	38000	3800	4300	0.24	1.00	2.8	0.67	4.2
22214LB	22214LBK	222000	50000	178000	40000	3600	4000	0.23	1.00	2.9	0.67	4.4
22215LB	22215LBK	236000	53000	185000	41500	3400	3700	0.22	1.00	3.1	0.67	4.6
22216LB	22216LBK	260000	58500	207000	46500	3200	3500	0.22	1.00	3.1	0.67	4.7
22217LB	22217LBK	327000	73500	260000	58500	3000	3250	0.22	1.00	3.0	0.67	4.5
22218LB	22218LBK	363000	81500	285000	64000	2600	3000	0.23	1.00	2.9	0.67	4.3
22219LB	22219LBK	400000	90000	316000	71000	2400	2900	0.24	1.00	2.9	0.67	4.3
22220LB	22220LBK	463000	104000	356000	80000	2200	2800	0.24	1.00	2.8	0.67	4.2
22222LB	22222LBK	587000	132000	454000	102000	2000	2500	0.25	1.00	2.7	0.67	4.0
22224LB	22224LBK	725000	163000	534000	120000	1900	2300	0.25	1.00	2.7	0.67	4.0
22226LB	22226LBK	872000	196000	636000	143000	1800	2100	0.26	1.00	2.6	0.67	3.9
22228LB	22228LBK	1010000	228000	738000	166000	1700	1950	0.25	1.00	2.7	0.67	4.0
22230LB	22230LBK	1200000	270000	845000	190000	1600	1850	0.25	1.00	2.7	0.67	4.0
22232LB	22232LBK	1380000	310000	961000	216000	1500	1700	0.26	1.00	2.6	0.67	3.9
22234LB	22234LBK	1530000	345000	1110000	250000	1300	1600	0.26	1.00	2.6	0.67	3.9
22236LB	22236LBK	1620000	365000	1130000	255000	1300	1500	0.25	1.00	2.7	0.67	4.0
22238LB	22238LBK	1850000	415000	1200000	270000	1200	1400	0.28	1.00	2.4	0.67	3.6
22240LB	22240LBK	2000000	450000	1330000	300000	1100	1300	0.29	1.00	2.3	0.67	3.5
22244LB	22244LBK	2450000	550000	1620000	365000	1000	1200	0.29	1.00	2.3	0.67	3.5
22248LB	22248LBK	2890000	650000	1870000	420500	750	950	0.27	1.00	2.5	0.67	3.7

If the load P is greater than .25C, consult Rexnord Bearing Division.

Speed limits are based on the following:

1. Negligible seal torque (e.g., non-contact seals)
2. Proper operating internal clearance.
3. Adequate lubrication and maintenance (special lubricants and/or more frequent relubrication may be required).
4. Normal room temperature environment and no extraneous heat sources, such that bearing operating temperature does not exceed 100°C (212°F).
5. Equivalent radial load not greater than 7% of C.
6. Axial load, if any, not greater than 20% of radial load.

Table 7 • Series 22300LB,22300LBK Load Ratings and Speed Limits

Bearing Number		Co Static Load Rating		C Basic Load Rating		Speed Limit rpm			$\frac{F_a}{F_r} \leq e$		$\frac{F_a}{F_r} > e$	
Cylindrical Bore	Tapered Bore	newtons	pounds	newtons	pounds	Grease	Oil	e	X1	Y1	X2	Y2
22308LB	22308LBK	145000	32500	129000	29000	4500	5600	0.36	1.00	1.9	0.67	2.8
22309LB	22309LBK	178000	40000	158000	35500	3800	4800	0.36	1.00	1.9	0.67	2.8
22310LB	22310LBK	214000	48000	189000	42500	3600	4300	0.36	1.00	1.9	0.67	2.8
22311LB	22311LBK	254000	57000	222000	50000	3200	4000	0.36	1.00	1.9	0.67	2.8
22312LB	22312LBK	302000	68000	260000	58500	3000	3800	0.35	1.00	1.9	0.67	2.8
22313LB	22313LBK	356000	80000	291000	65500	2600	3400	0.34	1.00	2.0	0.67	3.0
22314LB	22314LBK	378000	85000	320000	72000	2400	3200	0.34	1.00	2.0	0.67	3.0
22315LB	22315LBK	436000	98000	369000	83000	2200	3000	0.34	1.00	2.0	0.67	3.0
22316LB	22316LBK	498000	112000	414000	93000	2000	2800	0.34	1.00	2.0	0.67	3.0
22317LB	22317LBK	543000	122000	454000	102000	1900	2600	0.33	1.00	2.0	0.67	3.0
22318LB	22318LBK	623000	140000	507000	114000	1800	2400	0.33	1.00	2.0	0.67	3.0
22319LB	22319LBK	681000	153000	556000	125000	1800	2400	0.33	1.00	2.0	0.67	3.0
22320LB	22320LBK	814000	183000	649000	146000	1700	2200	0.34	1.00	2.0	0.67	3.0
22322LB	22322LBK	1050000	236000	801000	180000	1600	2000	0.33	1.00	2.1	0.67	3.1
22324LB	22324LBK	1160000	260000	907000	204000	1400	1800	0.33	1.00	2.1	0.67	3.1
22326LB	22326LBK	1360000	305000	1050000	236000	1300	1700	0.33	1.00	2.1	0.67	3.1
22328LB	22328LBK	1600000	360000	1220000	275000	1100	1500	0.34	1.00	2.0	0.67	3.0
22330LB	22330LBK	1800000	405000	1380000	310000	1000	1400	0.33	1.00	2.0	0.67	3.0
22332LB	22332LBK	1890000	425000	1450000	325000	950	1300	0.37	1.00	1.8	0.67	2.7
22334LB	22334LBK	2110000	475000	1600000	360000	950	1300	0.37	1.00	1.8	0.67	2.7
22336LB	22336LBK	2360000	530000	1730000	390000	900	1200	0.37	1.00	1.8	0.67	2.7
22338LB	22338LBK	2540000	570000	1850000	415000	850	1100	0.37	1.00	1.8	0.67	2.7
22340LB	22340LBK	2800000	630000	2070000	465000	850	1100	0.36	1.00	1.9	0.67	2.8
22344LB	22344LBK	3340000	750000	2360000	530000	700	900	0.35	1.00	2.0	0.67	2.9
22348LB	22348LBK	3800000	854500	2600000	584500	670	850	0.32	1.00	2.1	0.67	3.2
22356LB	22356LBK	5150000	1157800	3500000	787000	560	710	0.31	1.00	2.1	0.67	3.2

If the load P is greater than .25C, consult Rexnord Bearing Division.

Speed limits are based on the following:

1. Negligible seal torque (e.g., non-contact seals)
2. Proper operating internal clearance.
3. Adequate lubrication and maintenance (special lubricants and/or more frequent relubrication may be required).
4. Normal room temperature environment and no extraneous heat sources, such that bearing operating temperature does not exceed 100°C (212°F).
5. Equivalent radial load not greater than 7% of C.
6. Axial load, if any, not greater than 20% of radial load.

Table 8 – Series 23000LB, 23000LBK Load Ratings and Speed Limits

Bearing Number		Co Static Load Rating		C Basic Dynamic Load Rating		Speed Limit, rpm		Fa/Fr ≤ e			Fa/Fr > e	
Cylindrical Bore	Tapered Bore	newtons	pounds	newtons	pounds	Grease	Oil	e	X1	Y1	X2	Y2
23044LB	23044LBK	1980000	445100	1090000	245000	950	1200	0.24	1.00	2.8	0.67	4.1
23048LB	23048LBK	2180000	490000	1160000	260000	950	1100	0.25	1.00	2.7	0.67	4.1
23052LB	23052LBK	2580000	580000	1430000	321500	800	950	0.25	1.00	2.7	0.67	4.1
23056LB	23056LBK	2980000	670000	1530000	345000	800	950	0.25	1.00	2.7	0.67	4.1
23060LB	23060LBK	3700000	832000	1920000	431600	670	850	0.24	1.00	2.8	0.67	4.2
23064LB	23064LBK	3850000	865500	1960000	440600	630	800	0.24	1.00	2.8	0.67	4.2
23068LB	23068LBK	4400000	989200	2280000	512600	560	710	0.24	1.00	2.8	0.67	4.2
23072LB	23072LBK	4700000	1056600	2390000	537500	530	670	0.24	1.00	2.8	0.67	4.2
23076LB	23076LBK	5100000	1146500	2500000	562000	530	630	0.22	1.00	3.0	0.67	4.5
23080LB	23080LBK	5900000	1326500	2970000	668000	480	600	0.23	1.00	3.0	0.67	4.4
23084LB	23084LBK	5850000	1315200	2910000	654200	450	560	0.23	1.00	2.9	0.67	4.3
23088LB	23088LBK	6350000	1427500	3150000	708200	430	530	0.23	1.00	2.9	0.67	4.3
23092LB	23092LBK	7100000	1596200	3450000	775600	400	500	0.22	1.00	3.1	0.67	4.6
23096LB	23096LBK	7950000	1787200	3800000	854300	400	480	0.22	1.00	3.1	0.67	4.6
230530LB	230530LBK	9200000	2068200	4400000	989200	340	430	0.22	1.00	3.1	0.67	4.6
230560LB	230560LBK	10700000	2405500	5000000	1124000	320	400	0.22	1.00	3.0	0.67	4.5
230600LB	230600LBK	12200000	2743000	5450000	1225200	300	360	0.21	1.00	3.3	0.67	4.8
230630LB	230630LBK	12700000	2855000	5900000	1326400	280	340	0.22	1.00	3.1	0.67	4.7

If the load P is greater than .25C, consult Rexnord Bearing Division.

Speed limits are based on the following:

1. Negligible seal torque (e.g., non-contact seals)
2. Proper operating internal clearance.
3. Adequate lubrication and maintenance (special lubricants and/or more frequent relubrication may be required).
4. Normal room temperature environment and no extraneous heat sources, such that bearing operating temperature does not exceed 100°C (212°F).
5. Equivalent radial load not greater than 7% of C.
6. Axial load, if any, not greater than 20% of radial load.

Table 9 – Series 23100LB, 23100LBK Load Ratings and Speed Limits

Bearing Number		Co Static Load Rating		C Basic Dynamic Load Rating		Speed Limit, rpm		Fa/Fr ≤ e			Fa/Fr > e	
Cylindrical Bore	Tapered Bore	newtons	pounds	newtons	pounds	Grease	Oil	e	X1	Y1	X2	Y2
23144LB	23144LBK	2710000	609200	1570000	353000	710	950	0.30	1.00	2.2	0.67	3.3
23148LB	23148LBK	3100000	697000	1790000	402500	670	850	0.30	1.00	2.2	0.67	3.3
23152LB	23152LBK	3750000	843000	2160000	485500	600	800	0.32	1.00	2.1	0.67	3.2
23156LB	23156LBK	4000000	899300	2230000	501500	560	750	0.30	1.00	2.2	0.67	3.3
23160LB	23160LBK	4800000	1079000	2670000	600500	500	670	0.31	1.00	2.2	0.67	3.3
23164LB	23164LBK	5500000	1236500	3050000	685700	480	600	0.31	1.00	2.1	0.67	3.2
23168LB	23168LBK	6600000	1483800	3600000	809500	430	560	0.31	1.00	2.1	0.67	3.2
23172LB	23172LBK	7100000	1596200	3800000	854500	400	530	0.31	1.00	2.2	0.67	3.2
23176LB	23176LBK	7600000	1708500	4000000	899200	400	500	0.30	1.00	2.2	0.67	3.3
23180LB	23180LBK	7900000	1776000	4150000	933000	380	480	0.29	1.00	2.3	0.67	3.4
23184LB	23184LBK	9400000	2113200	5000000	1124000	340	450	0.31	1.00	2.2	0.67	3.3
23188LB	23188LBK	10300000	2315500	5300000	1191500	320	430	0.30	1.00	2.2	0.67	3.3
23192LB	23192LBK	10900000	2450500	5700000	1281400	300	400	0.31	1.00	2.2	0.67	3.3
23196LB	23196LBK	11700000	2630500	6050000	1360100	300	380	0.31	1.00	2.2	0.67	3.3
231530LB	231530LBK	14100000	3169800	7150000	1607400	260	340	0.30	1.00	2.2	0.67	3.3
231560LB	231560LBK	15500000	3484500	7850000	1764800	240	320	0.30	1.00	2.3	0.67	3.4
231600LB	231600LBK	17500000	3934000	8750000	1967000	220	280	0.30	1.00	2.3	0.67	3.4
231630LB	231630LBK	19400000	4361100	9600000	2158100	200	260	0.30	1.00	2.3	0.67	3.4

If the load P is greater than .25C, consult Rexnord Bearing Division.

Speed limits are based on the following:

1. Negligible seal torque (e.g., non-contact seals)
2. Proper operating internal clearance.
3. Adequate lubrication and maintenance (special lubricants and/or more frequent relubrication may be required).
4. Normal room temperature environment and no extraneous heat sources, such that bearing operating temperature does not exceed 100°C (212°F).
5. Equivalent radial load not greater than 7% of C.
6. Axial load, if any, not greater than 20% of radial load.

Table 10 – Series 23200LB, 23200LBK Load Ratings and Speed Limits

Bearing Number		Co Static Load Rating		C Basic Dynamic Load Rating		Speed Limit, rpm		Fa/Fr ≤ e			Fa/Fr > e	
Cylindrical Bore	Tapered Bore	newtons	pounds	newtons	pounds	Grease	Oil	e	X1	Y1	X2	Y2
23244LB	23244LBK	3400000	764500	2020000	454000	670	900	0.35	1.00	1.9	0.67	2.9
23248LB	23248LBK	4050000	910500	2440000	548500	630	800	0.37	1.00	1.8	0.67	2.7
23252LB	23252LBK	4550000	1022900	2740000	616000	560	750	0.37	1.00	1.8	0.67	2.7
23256LB	23256LBK	4900000	1101600	2880000	647500	530	670	0.35	1.00	1.9	0.67	2.9
23260LB	23260LBK	5900000	1326400	3400000	764500	480	630	0.35	1.00	1.9	0.67	2.9
23264LB	23264LBK	6900000	1551200	3900000	877000	450	600	0.36	1.00	1.9	0.67	2.8
23268LB	23268LBK	7800000	1753500	4400000	989200	400	530	0.36	1.00	1.9	0.67	2.8
23272LB	23272LBK	8550000	1922100	4800000	1079000	380	500	0.36	1.00	1.9	0.67	2.8
23276LB	23276LBK	9200000	2068500	5150000	1157800	360	480	0.35	1.00	1.9	0.67	2.9
23280LB	23280LBK	10400000	2338000	5800000	1303900	340	450	0.36	1.00	1.9	0.67	2.8
23284LB	23284LBK	11700000	2630500	6450000	1450000	320	430	0.35	1.00	1.9	0.67	2.9
23288LB	23288LBK	12800000	2877500	6900000	1551200	300	400	0.35	1.00	1.9	0.67	2.9
23292LB	23292LBK	13700000	3080000	7350000	1652400	280	380	0.36	1.00	1.9	0.67	2.8
23296LB	23296LBK	14400000	3237500	7850000	1764800	260	360	0.36	1.00	1.9	0.67	2.8

If the load P is greater than .25C, consult Rexnord Bearing Division.

Speed limits are based on the following:

1. Negligible seal torque (e.g., non-contact seals)
2. Proper operating internal clearance.
3. Adequate lubrication and maintenance (special lubricants and/or more frequent relubrication may be required).
4. Normal room temperature environment and no extraneous heat sources, such that bearing operating temperature does not exceed 100°C (212°F).
5. Equivalent radial load not greater than 7% of C.
6. Axial load, if any, not greater than 20% of radial load.

Table 11 – Series 23900LB, 23900LBK Load Ratings and Speed Limits

Bearing Number		Co Static Load Rating		C Basic Dynamic Load Rating		Speed Limit, rpm		Fa/Fr ≤ e			Fa/Fr > e	
Cylindrical Bore	Tapered Bore	newtons	pounds	newtons	pounds	Grease	Oil	e	X1	Y1	X2	Y2
23944LB	23944LBK	1240000	279000	625000	140500	1000	1300	0.18	1.00	3.8	0.67	5.7
23948LB	23948LBK	1300000	292500	635000	143000	950	1200	0.17	1.00	4.0	0.67	6.0

If the load P is greater than .25C, consult Rexnord Bearing Division.

Speed limits are based on the following:

1. Negligible seal torque (e.g., non-contact seals)
2. Proper operating internal clearance.
3. Adequate lubrication and maintenance (special lubricants and/or more frequent relubrication may be required).
4. Normal room temperature environment and no extraneous heat sources, such that bearing operating temperature does not exceed 100°C (212°F).
5. Equivalent radial load not greater than 7% of C.
6. Axial load, if any, not greater than 20% of radial load.

Cylindrical Bore Bearings - Radial Clearances									
Series 22200, 22300, 23000, 23100, 23200		Radial Internal Clearance, Inches							
		C2		C0		C3 (basic)		C4	
Basic Size	Bore (mm)	Min	Max	Min	Max	Min	Max	Min	Max
08	40	0.0006	0.0012	0.0012	0.0018	0.0018	0.0024	0.0024	0.0032
09 10	45 50	0.0008	0.0014	0.0014	0.0022	0.0022	0.0030	0.0030	0.0039
11 12 13	55 60 65	0.0010	0.0017	0.0017	0.0026	0.0026	0.0036	0.0036	0.0047
14 15 16	70 75 80	0.0012	0.0020	0.0020	0.0032	0.0032	0.0044	0.0044	0.0057
17 18 19 20	85 90 95 100	0.0014	0.0025	0.0025	0.0039	0.0039	0.0053	0.0053	0.0071
22 24	110 120	0.0017	0.0031	0.0031	0.0048	0.0048	0.0064	0.0064	0.0083
26 28	130 140	0.0020	0.0038	0.0038	0.0057	0.0057	0.0075	0.0075	0.0095
30 32	150 160	0.0024	0.0043	0.0043	0.0065	0.0065	0.0087	0.0087	0.0110
34 36	170 180	0.0026	0.0047	0.0047	0.0071	0.0071	0.0095	0.0095	0.0122
38 40	190 200	0.0028	0.0051	0.0051	0.0079	0.0079	0.0103	0.0103	0.0133
44	220	0.0032	0.0055	0.0055	0.0087	0.0087	0.0114	0.0114	0.0149
48	240	0.0036	0.0059	0.0059	0.0095	0.0095	0.0126	0.0126	0.0165
52 56	260 280	0.0039	0.0067	0.0067	0.0103	0.0103	0.0138	0.0138	0.0180
60	300	0.0044	0.0075	0.0075	0.0110	0.0110	0.0145	0.0145	0.0197
64 68	320 340	0.0047	0.0079	0.0079	0.0122	0.0122	0.0161	0.0161	0.0217
72 76 80	360 380 400	0.0051	0.0087	0.0087	0.0134	0.0134	0.0177	0.0177	0.0236
84 88	420 440	0.0055	0.0094	0.0094	0.0146	0.0146	0.0197	0.0197	0.0260
92 96	460 480	0.0055	0.0102	0.0102	0.0161	0.0161	0.0217	0.0217	0.0283
	530 560	0.0059	0.0110	0.0110	0.0173	0.0173	0.0236	0.0236	0.0307
	600 630	0.0067	0.0122	0.0122	0.0189	0.0189	0.0256	0.0256	0.0335

C2 = Internal clearance less than C0
C0 = Internal clearance
C3 = Internal clearance greater than C0
C4 = Internal clearance greater than C3

Tapered Bore Bearings - Radial Clearances									
Series 22200, 22300, 23000, 23100, 23200		Radial Internal Clearance, Inches							
		C2		C0		C3 (basic)		C4	
Basic Size	Bore (mm)	Min	Max	Min	Max	Min	Max	Min	Max
08	40	0.0008	0.0014	0.0014	0.0020	0.0020	0.0026	0.0026	0.0033
09 10	45 50	0.0012	0.0018	0.0018	0.0024	0.0024	0.0031	0.0031	0.0039
11 12 13	55 60 65	0.0014	0.0022	0.0022	0.0030	0.0030	0.0037	0.0037	0.0047
14 15 16	70 75 80	0.0018	0.0028	0.0028	0.0037	0.0037	0.0047	0.0047	0.0059
17 18 19 20	85 90 95 100	0.0020	0.0030	0.0030	0.0043	0.0043	0.0055	0.0055	0.0071
22 24	110 120	0.0025	0.0039	0.0039	0.0053	0.0053	0.0067	0.0067	0.0087
26 28	130 140	0.0030	0.0047	0.0047	0.0063	0.0063	0.0079	0.0079	0.0102
30 32	150 160	0.0033	0.0051	0.0051	0.0071	0.0071	0.0091	0.0091	0.0118
34 36	170 180	0.0037	0.0055	0.0055	0.0079	0.0079	0.0102	0.0102	0.0134
38 40	190 200	0.0041	0.0063	0.0063	0.0087	0.0087	0.0114	0.0114	0.0146
44	220	0.0047	0.0071	0.0071	0.0098	0.0098	0.0126	0.0126	0.0161
48	240	0.0053	0.0079	0.0079	0.0106	0.0106	0.0138	0.0138	0.0177
52 56	260 280	0.0059	0.0087	0.0087	0.0118	0.0118	0.0154	0.0154	0.0193
60	300	0.0065	0.0094	0.0094	0.0130	0.0130	0.0169	0.0169	0.0213
64 68	320 340	0.0075	0.0106	0.0106	0.0142	0.0142	0.0185	0.0185	0.0232
72 76 80	360 380 400	0.0083	0.0118	0.0118	0.0157	0.0157	0.0205	0.0205	0.0256
84 88	420 440	0.0091	0.0130	0.0130	0.0173	0.0173	0.0224	0.0224	0.0283
92 96	460 480	0.0102	0.0146	0.0146	0.0193	0.0193	0.0248	0.0248	0.0311
	530 560	0.0114	0.0161	0.0161	0.0213	0.0213	0.0268	0.0268	0.0343
	600 630	0.0126	0.0181	0.0181	0.0236	0.0236	0.0299	0.0299	0.0386

C2 = Internal clearance less than C0

C0 = Internal clearance

C3 = Internal clearance greater than C0

C4 = Internal clearance greater than C3

www.rexnord.com

Rexnord Industries, LLC, 7601 Rockville Road, Indianapolis, IN 46214-3120 USA
Phone: 317-273-5500 Fax: 317-273-5620

PLB23000K

Photo Shows a 2-Bolt Spherical Roller Bearing Two-Piece Pillow Block Unit

Product Features

Corrosion resistant powder coating
Two piece cast iron housing
Broad range of sealing options
Fixed or Expansion - Up to 3/8" expansion
Matched base & cap
Large reservoir for grease or oil storage
Tapered adapter mounted
See Features & Benefits for additional info.

Bearing Drawing

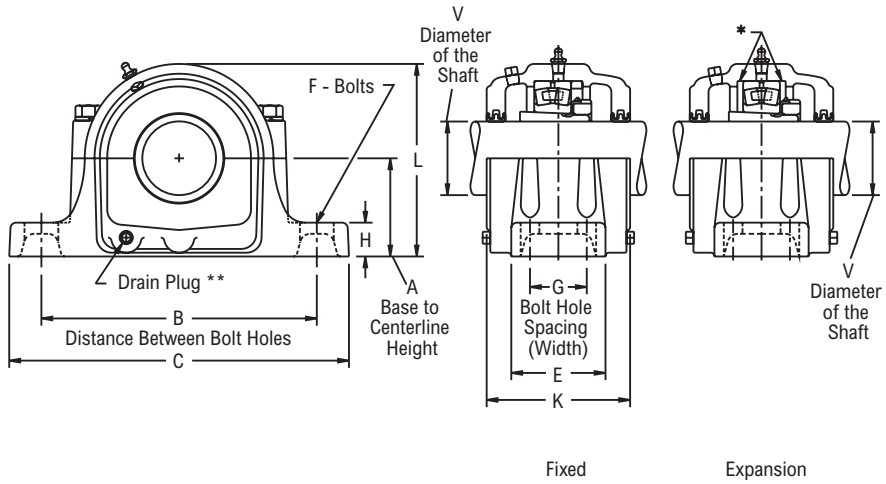

Bearing Dimensions

Size Code	Shaft Diameter	Part Number	A Base to Centerline Height	B Min. Distance Between Bolt Holes	B Max. Distance Between Bolt Holes	G Bolt Hole Spacing (Width)	C	E	F Bolts	H	K	L	Approx. Weight
Four-Bolt Pillow Block													
23044	7 15/16	PLB23044K71516	7 7/8	21 5/8	24 3/8	4 1/2	28	7 1/2	1 1/4	3 1/8	10 3/4	15 11/16	413.00
	8	PLB23044K8											
23048	8 1/2	PLB23048K812	8 1/4	22 1/2	25	5	29 1/2	8	1 1/4	3 3/8	11 1/8	16 11/16	474.00
	8 15/16	PLB23048K81516											
	9	PLB23048K9											
23052	9 7/16	PLB23052K9716	9 1/2	24 3/4	27 7/8	5 1/4	32 3/4	8 3/4	1 1/2	3 3/4	11 7/8	18 13/16	530.00
	9 1/2	PLB23052K912											
23056	9 15/16	PLB23056K91516	9 7/8	26 1/4	29 1/2	5 1/2	34 1/4	9	1 1/2	4	12 1/16	20 3/16	800.00
	10	PLB23056K10											
	10 7/16	PLB23056K10716											
23060	10 15/16	PLB23060K101516	12	32 3/4	33 1/2	9	38 1/4	14 3/4	1 5/8	3 1/2	15 1/2	24	1,200.00
	11	PLB23060K11											
23064	11 15/16	PLB23064K111516	12	32 3/4	33 1/2	9	38 1/4	15 1/8	1 5/8	3 1/2	16 1/2	24	1,250.00
	12	PLB23064K12											
23068	12 1/2	PLB23068K1212	12	32	33 1/2	10	39	15 1/4	1 7/8	4 3/16	15 3/4	24	1,550.00
23072	12 15/16	PLB23072K121516	12 13/16	35	36 1/2	10 1/2	41 3/4	15 3/4	1 7/8	4 1/2	16 1/4	26	1,650.00
	13	PLB23072K13											
23076	13 15/16	PLB23076K131516	12 13/16	35	36 1/2	10 1/2	41 3/4	15 3/4	1 7/8	4 1/2	16 1/4	26	1,700.00
	14	PLB23076K14											3,245.00
23080	15	PLB23080K15	14 1/2	39 1/4	40 3/4	11	46	17 1/8	2	5	18	28 3/4	2,300.00
23084	15 3/4	PLB23084K1534	14 1/2	39 1/4	40 3/4	11	46	17 1/8	2	5	18	28 3/4	2,300.00
23088	16 1/2	PLB23088K1612	15 1/2	41 1/2	43 1/2	12 1/4	48 3/4	18 3/4	2 1/4	5 1/2	19 3/8	31	2,550.00
23092	17	PLB23092K17	15 1/2	41 1/2	43 1/2	12 1/4	48 3/4	18 3/4	2 1/4	5 1/2	19 3/8	31	2,850.00
23096	18	PLB23096K18	17	44 1/2	46 5/8	14 1/2	52 3/4	22 1/4	2 1/4	5 1/2	21 3/4	34	4,250.00
230530	19 1/2	PLB230530K1912	18	47 1/8	48 7/8	15	54 1/4	21 5/8	2 1/2	5 3/4	22 3/4	35 3/4	5,200.00
230560	21	PLB230560K21	18	47 1/8	48 7/8	15	54 1/4	21 5/8	2 1/2	5 3/4	22 3/4	35 3/4	3,745.00
230600	22	PLB230600K22	20	52 1/2	54	16	60	22	3	6	24 5/8	40	5,525.00
230630	24	PLB230630K24	20	52 1/2	54	16	60	22	3	6	24 5/8	40	5,356.00

Additional Notes

Please Call 1-866-REXNORD for availability
Lubrication Fitting Tap Size, 1/4" PT
Expansion is 3/8" for all shaft sizes
Multi-labyrinth seals standard
Selection Guide, see Link-Belt Split Spherical Roller Bearing Selection Guide section
Load Ratings & Speed Limits, see Link-Belt Split Spherical Roller Bearing Load Ratings & Speed Limits section

Note: Dimensions subject to change. Certified dimensions of ordered material furnished on request.

PLB23000

Photo Shows a 2-Bolt Spherical Roller Bearing Two-Piece Pillow Block Unit

Product Features

Corrosion resistant powder coating
Two piece cast iron housing
Fixed or Expansion - Up to 3/8" expansion
Matched base & cap
Large reservoir for grease or oil storage
Direct shaft mounted
See Features & Benefits for additional info.

Bearing Drawing

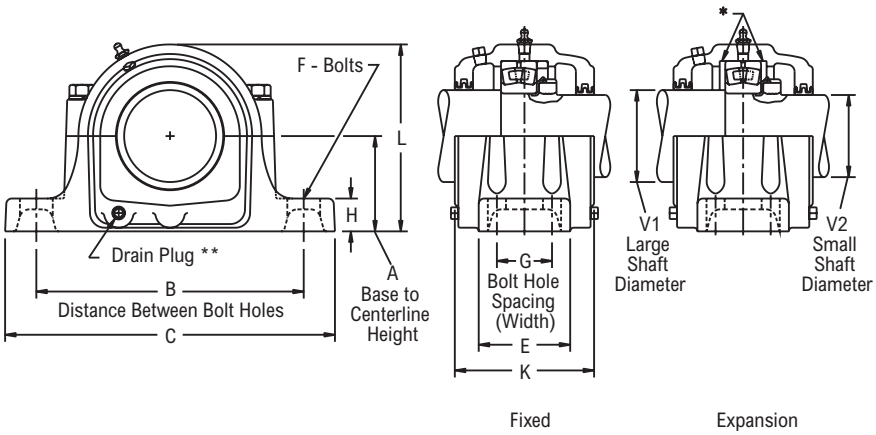

Bearing Dimensions

Size Code	Shaft Diameter	V1 Large Shaft Diameter	V2 Small Shaft Diameter	Part Number	A Base to Centerline Height	B Min. Distance Between Bolt Holes	B Max. Distance Between Bolt Holes	G Bolt Hole Spacing (Width)	C	E	F Bolts	H	L	Approx. Weight
Four-Bolt Pillow Block														
23044	8.66	9 9/16	8 5/16	PLB23044	7 7/8	21 5/8	24 3/8	4 1/2	28	7 1/2	1 1/4	3 1/8	15 11/16	413.00
23048	9.45	10 1/2	9 3/16	PLB23048	8 1/4	22 1/2	25	5	29 1/2	8	1 1/4	3 3/8	16 11/16	388.00
23052	10.24	11 1/2	9 15/16	PLB23052	9 1/2	24 3/4	27 7/8	5 1/4	32 3/4	8 3/4	1 1/2	3 3/4	18 13/16	547.00
23056	11.02	12 1/2	10 3/4	PLB23056	9 7/8	26 1/4	29 1/2	5 1/2	34 1/4	9	1 1/2	4	20 3/16	528.00
23060	11.81	13	11 1/2	PLB23060	12	32 3/4	33 1/2	9	38 1/4	14 3/4	1 5/8	3 1/2	24	1,200.00
23064	12.60	13 3/4	12 1/4	PLB23064	12	32 3/4	33 1/2	9	38 1/4	15 1/8	1 5/8	3 1/2	24	1,300.00
23068	13.39	15	13	PLB23068	12	32	33 1/2	10	39	15 1/4	1 7/8	4 3/16	24	1,550.00
23072	14.17	15 3/4	13 3/4	PLB23072	12 13/16	35	36 1/2	10 1/2	41 3/4	15 3/4	1 7/8	4 1/2	26	1,650.00
23076	14.96	16 3/4	14 1/2	PLB23076	12 13/16	35	36 1/2	10 1/2	41 3/4	15 3/4	1 7/8	4 1/2	26	1,700.00
23080	15.75	17 1/2	15 3/8	PLB23080	14 1/2	39 1/4	40 3/4	11	46	17 1/8	2	5	28 3/4	2,300.00
23084	16.54	18	16	PLB23084	14 1/2	39 1/4	40 3/4	11	46	17 1/8	2	5	28 3/4	2,300.00
23088	17.32	19 1/2	17	PLB23088	15 1/2	41 1/2	43 1/2	12 1/4	48 3/4	18 3/4	2 1/4	5 1/2	31	2,550.00
23092	18.11	20	17 3/4	PLB23092	15 1/2	41 1/2	43 1/2	12 1/4	48 3/4	18 3/4	2 1/4	5 1/2	31	2,850.00
23096	18.90	21	18 1/2	PLB23096	17	44 1/2	46 5/8	14 1/2	52 3/4	22 1/4	2 1/4	5 1/2	34	4,250.00
230530	20.87	22 1/2	20 3/8	PLB230530	18	47 1/8	48 7/8	15	54 1/4	21 5/8	2 1/2	5 3/4	35 3/4	5,200.00
230560	22.05	-	-	PLB230560	18	47 1/8	48 7/8	15	54 1/4	21 5/8	2 1/2	5 3/4	35 3/4	3,745.00

Additional Notes

Please Call 1-866-REXNORD for availability
Lubrication Fitting Tap Size, 1/4" PT
Expansion is 3/8" for all shaft sizes
Multi-labyrinth seals standard
Selection Guide, see Link-Belt Split Spherical Roller Bearing Selection Guide section
Load Ratings & Speed Limits, see Link-Belt Split Spherical Roller Bearing Load Ratings & Speed Limits section

Note: Dimensions subject to change. Certified dimensions of ordered material furnished on request.

PLB23100K

Bearing Two-Piece Pillow Block Unit

Product Features

Corrosion resistant powder coating
Two piece cast iron housing
Broad range of sealing options
Fixed or Expansion - Up to 3/8" expansion
Matched base & cap
Large reservoir for grease or oil storage
Tapered adapter mounted
See Features & Benefits for additional info.

Bearing Drawing

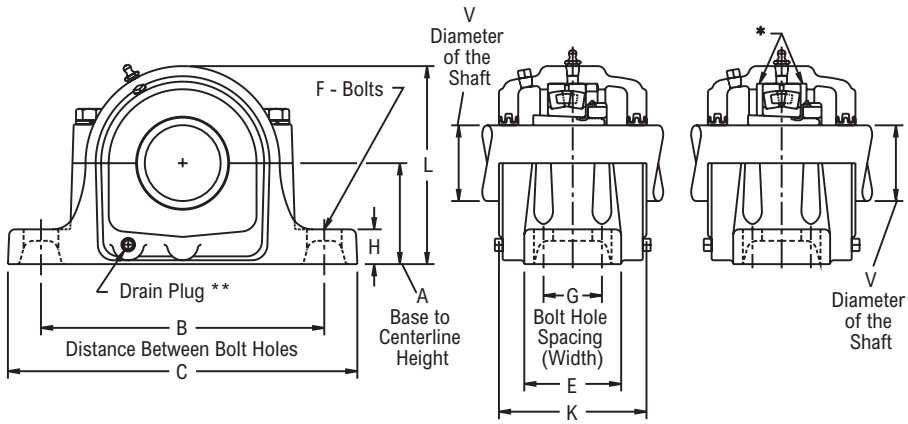

Bearing Dimensions

Size Code	Shaft Diameter	Part Number	A Base to Centerline Height	B Min. Distance Between Bolt Holes	B Max. Distance Between Bolt Holes	G Bolt Hole Spacing (Width)	C	E	F Bolts	H	L	Approx. Weight
Four-Bolt Pillow Block												
23144	8	PLB23144K8	8 1/4	22 1/2	25	5	29 1/2	8	1 1/4	3 3/8	16 1/2	496.00
23148	8 15/16	PLB23148K81516	9 1/2	24 3/4	27 7/8	5 1/4	32 3/4	8 3/4	1 1/2	3 3/4	18 5/8	820.00
23152	9 7/16	PLB23152K9716	10 1/4	29	30 1/2	8 3/4	35	14 1/2	1 5/8	3 3/4	20 1/2	1,029.00
23156	10 7/16	PLB23156K10716	12	32 3/4	33 1/2	9	38 1/4	14 3/4	1 5/8	3 1/2	24	1,253.00
23160	10 15/16	PLB23160K101516	12	32 3/4	33 1/2	9	38 1/4	15 1/8	1 5/8	3 1/2	24	1,333.00
23164	11 15/16	PLB23164K111516	12 13/16	35	36 1/2	10 1/2	41 3/4	15 3/4	1 7/8	4 1/2	26	1,768.00
23168	12 7/16	PLB23168K12716	14	36 3/4	38 1/4	10 3/4	43 3/4	18 1/4	2	5	28	2,265.00
23172	13 7/16	PLB23172K13716	14 1/2	39 1/4	40 3/4	11	46	17 1/8	2	5	28 3/4	2,442.00
23176	13 15/16	PLB23176K131516	14 1/2	39 1/4	40 3/4	11	46	17 1/8	2	5	28 3/4	2,473.00
23180	15	PLB23180K15	15 1/2	41 1/2	43 1/2	12 1/4	48 3/4	18 3/4	2 1/4	5 1/2	31	3,119.00
23184	15 3/4	PLB23184K1534	17	44 1/2	46 5/8	14 1/2	52 3/4	22 1/4	2 1/4	5 1/2	34	4,039.00
23188	16 1/2	PLB23188K1612	17	44 1/2	46 5/8	14 1/2	52 3/4	22 1/4	2 1/4	5 1/2	34	4,003.00
23192	17	PLB23192K17	18	47 1/8	48 7/8	15	54 1/4	21 5/8	2 1/2	5 3/4	35 3/4	4,600.00
23196	18	PLB23196K18	18	47 1/8	48 7/8	15	54 1/4	21 5/8	2 1/2	5 3/4	35 3/4	4,707.00
231530	19 1/2	PLB231530K1912	20	52 1/2	54	16	60	22	3	6	40	6,002.00
231560	21	PLB231560K21	20	52 1/2	54	16	60	22	3	6	40	5,881.00

Additional Notes

Please Call 1-866-REXNORD for availability
Lubrication Fitting Tap Size, 1/4" PT
Expansion is 3/8" for all shaft sizes
Multi-labyrinth seals standard
Selection Guide, see Link-Belt Split Spherical Roller Bearing Selection Guide section
Load Ratings & Speed Limits, see Link-Belt Split Spherical Roller Bearing Load Ratings & Speed Limits section

Note: Dimensions subject to change. Certified dimensions of ordered material furnished on request.

PLB23100

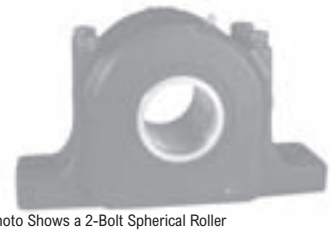

Photo Shows a 2-Bolt Spherical Roller Bearing Two-Piece Pillow Block Unit

Product Features

Corrosion resistant powder coating
Two piece cast iron housing
Fixed or Expansion - Up to 3/8" expansion
Matched base & cap
Large reservoir for grease or oil storage
Direct shaft mounted
See Features & Benefits for additional info.

Bearing Drawing

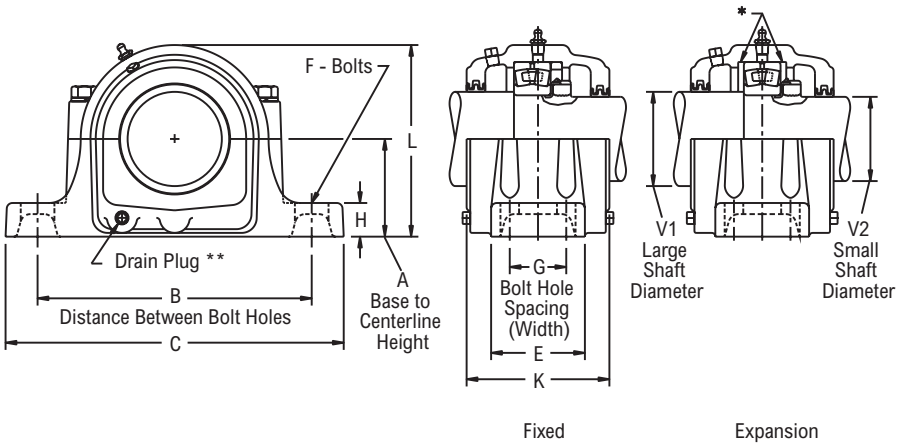

Bearing Dimensions

Size Code	Shaft Diameter	V1 Large Shaft Diameter	V2 Small Shaft Diameter	Part Number	A Base to Centerline Height	B Min. Distance Between Bolt Holes	B Max. Distance Between Bolt Holes	G Bolt Hole Spacing (Width)	C	E	F Bolts	H	L	Approx. Weight
Four-Bolt Pillow Block														
23144	8.66	9 9/16	8 5/16	PLB23144	8 1/4	22 1/2	25	5	29 1/2	8	1 1/4	3 3/8	16 1/2	466.00
23148	9.45	10 1/2	9 3/16	PLB23148	9 1/2	24 3/4	27 7/8	5 1/4	32 3/4	8 3/4	1 1/2	3 3/4	18 5/8	782.00
23152	10.24	11 1/2	9 15/16	PLB23152	10 1/4	29	30 1/2	8 3/4	35	14 1/2	1 5/8	3 3/4	20 1/2	985.00
23156	11.02	12 1/2	10 3/4	PLB23156	12	32 3/4	33 1/2	9	38 1/4	14 3/4	1 5/8	3 1/2	24	1,206.00
23160	11.81	13	11 1/2	PLB23160	12	32 3/4	33 1/2	9	38 1/4	15 1/8	1 5/8	3 1/2	24	1,305.00
23164	12.60	14	12 1/4	PLB23164	12 13/16	35	36 1/2	10 1/2	41 3/4	15 3/4	1 7/8	4 1/2	26	1,504.00
23168	13.39	15	13	PLB23168	14	36 3/4	38 1/4	10 3/4	43 3/4	18 1/4	2	5	28	2,172.00
23172	14.17	16	13 3/4	PLB23172	14 1/2	39 1/4	40 3/4	11	46	17 1/8	2	5	28 3/4	2,322.00
23176	14.96	17	14 1/2	PLB23176	14 1/2	39 1/4	40 3/4	11	46	17 1/8	2	5	28 3/4	2,348.00
23180	15.75	17 1/2	15 1/4	PLB23180	15 1/2	41 1/2	43 1/2	12 1/4	48 3/4	18 3/4	2 1/4	5 1/2	31	2,979.00
23184	16.54	18 1/2	15 3/4	PLB23184	17	44 1/2	46 5/8	14 1/2	52 3/4	22 1/4	2 1/4	5 1/2	34	3,894.00
23188	17.32	19 1/2	17	PLB23188	17	44 1/2	46 5/8	14 1/2	52 3/4	22 1/4	2 1/4	5 1/2	34	3,852.00
23192	18.11	20	17 3/4	PLB23192	18	47 1/8	48 7/8	15	54 1/4	21 5/8	2 1/2	5 3/4	35 3/4	4,391.00
23196	18.90	21	18 1/2	PLB23196	18	47 1/8	48 7/8	15	54 1/4	21 5/8	2 1/2	5 3/4	35 3/4	4,506.00
231530	20.87	-	-	PLB231530	20	52 1/2	54	16	60	22	3	6	40	6,002.00
231560	22.05	-	-	PLB231560	20	52 1/2	54	16	60	22	3	6	40	5,881.00

Additional Notes

Please Call 1-866-REXNORD for availability
Lubrication Fitting Tap Size, 1/4" PT
Expansion is 3/8" for all shaft sizes
Multi-labyrinth seals standard
Selection Guide, see Link-Belt Split Spherical Roller Bearing Selection Guide section
Load Ratings & Speed Limits, see Link-Belt Split Spherical Roller Bearing Load Ratings & Speed Limits section

Note: Dimensions subject to change. Certified dimensions of ordered material furnished on request.

PLB23200K

Photo Shows a 2-Bolt Spherical Roller Bearing Two-Piece Pillow Block Unit

Product Features

Corrosion resistant powder coating
Two piece cast iron housing
Broad range of sealing options
Fixed or Expansion - Up to 3/8" expansion
Matched base & cap
Large reservoir for grease or oil storage
Tapered adapter mounted
See Features & Benefits for additional info.

Bearing Drawing

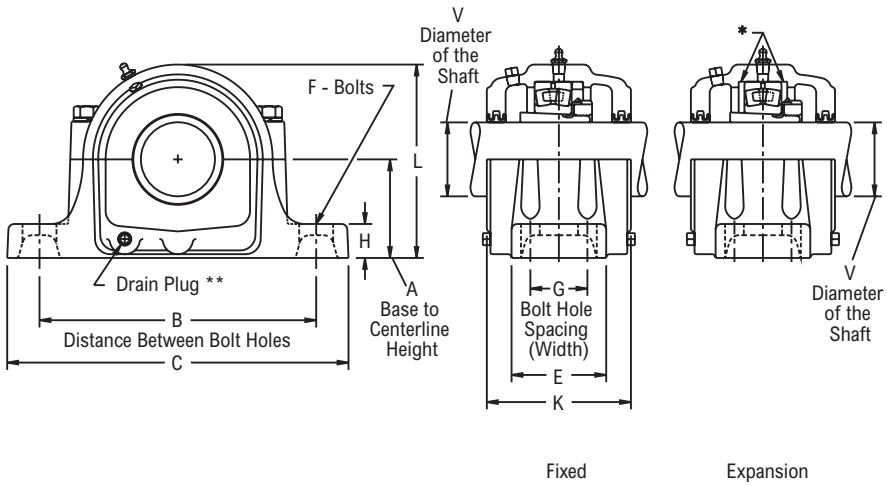

Bearing Dimensions

Size Code	Shaft Diameter	Part Number	A Base to Centerline Height	B Min. Distance Between Bolt Holes	B Max. Distance Between Bolt Holes	G Bolt Hole Spacing (Width)	C	E	F Bolts	H	L	Approx. Weight
Four-Bolt Pillow Block												
23244	8	PLB23244K8	9 1/2	24 3/4	27 7/8	5 1/4	32 3/4	8 3/4	1 1/2	3 3/4	18 5/8	712.00
23248	8 15/16	PLB23248K81516	10 1/4	29	30 1/2	8 3/4	35	14 1/2	1 5/8	3 3/4	20 1/2	1,080.00
23252	9 7/16	PLB23252K9716	12	32 3/4	33 1/2	9	38 1/4	15 1/8	1 5/8	3 1/2	24	1,301.00
23256	10 7/16	PLB23256K10716	12	32 3/4	33 1/2	9	38 1/4	15 1/8	1 5/8	3 1/2	24	1,400.00
23260	10 15/16	PLB23260K101516	12 13/16	35	36 1/2	10 1/2	41 3/4	15 3/4	1 7/8	4 1/2	26	1,822.00
23264	11 15/16	PLB23264K111516	14	36 3/4	38 1/4	10 3/4	43 3/4	18 1/4	2	5	28	2,173.00
23268	12 7/16	PLB23268K12716	14 1/2	39 1/4	40 3/4	11	46	17 1/8	2	5	28 3/4	2,582.00
23272	13 7/16	PLB23272K13716	15 1/2	41 1/2	43 1/2	12 1/4	48 3/4	18 3/4	2 1/4	5 1/2	31	3,278.00
23276	13 15/16	PLB23276K131516	15 1/2	41 1/2	43 1/2	12 1/4	48 3/4	18 3/4	2 1/4	5 1/2	31	3,245.00
23280	15	PLB23280K15	17	44 1/2	46 5/8	14 1/2	52 3/4	22 1/4	2 1/4	5 1/2	34	4,297.00
23284	15 3/4	PLB23284K1534	18	47 1/8	48 7/8	15	54 1/4	21 5/8	2 1/2	5 3/4	35 3/4	4,800.00
23288	16 1/2	PLB23288K1612	18	47 1/8	48 7/8	15	54 1/4	21 5/8	2 1/2	5 3/4	35 3/4	4,798.00
23292	17	PLB23292K17	18	47 1/8	48 7/8	15	54 1/4	21 5/8	2 1/2	5 3/4	35 3/4	4,461.00
23296	18	PLB23296K18	20	52 1/2	54	16	60	22	3	6	40	6,362.00

Additional Notes

Please Call 1-866-REXNORD for availability
Lubrication Fitting Tap Size, 1/4" PT
Expansion is 3/8" for all shaft sizes
Multi-labyrinth seals standard
Selection Guide, see Link-Belt Split Spherical Roller Bearing Selection Guide section
Load Ratings & Speed Limits, see Link-Belt Split Spherical Roller Bearing Load Ratings & Speed Limits section

Note: Dimensions subject to change. Certified dimensions of ordered material furnished on request.

PLB23200

Photo Shows a 2-Bolt Spherical Roller Bearing Two-Piece Pillow Block Unit

Product Features

Corrosion resistant powder coating
Two piece cast iron housing
Fixed or Expansion - Up to 3/8" expansion
Matched base & cap
Large reservoir for grease or oil storage
Direct shaft mounted
See Features & Benefits for additional info.

Bearing Drawing

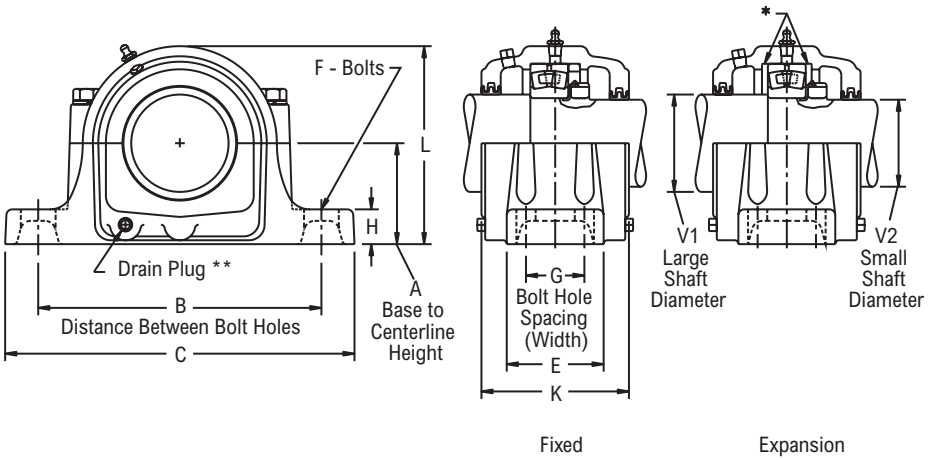

Bearing Dimensions

Size Code	Shaft Diameter	V1 Large Shaft Diameter	V2 Small Shaft Diameter	Part Number	A Base to Centerline Height	B Min. Distance Between Bolt Holes	B Max. Distance Between Bolt Holes	G Bolt Hole Spacing (Width)	C	E	F Bolts	H	L	Approx. Weight
Four-Bolt Pillow Block														
23244	8.66	9 9/16	8 5/16	PLB23244	9 1/2	24 3/4	27 7/8	5 1/4	32 3/4	8 3/4	1 1/2	3 3/4	18 5/8	661.00
23248	9.45	10 1/2	9 3/16	PLB23248	10 1/4	29	30 1/2	8 3/4	35	14 1/2	1 5/8	3 3/4	20 1/2	1,032.00
23252	10.24	11 1/2	9 15/16	PLB23252	12	32 3/4	33 1/2	9	38 1/4	15 1/8	1 5/8	3 1/2	24	1,247.00
23256	11.02	12 1/2	10 3/4	PLB23256	12	32 3/4	33 1/2	9	38 1/4	15 1/8	1 5/8	3 1/2	24	1,400.00
23260	11.81	13	11 1/2	PLB23260	12 13/16	35	36 1/2	10 1/2	41 3/4	15 3/4	1 7/8	4 1/2	26	1,754.00
23264	12.60	14	12 1/4	PLB23264	14	36 3/4	38 1/4	10 3/4	43 3/4	18 1/4	2	5	28	2,243.00
23268	13.39	15	13	PLB23268	14 1/2	39 1/4	40 3/4	11	46	17 1/8	2	5	28 3/4	2,492.00
23272	14.17	16	13 3/4	PLB23272	15 1/2	41 1/2	43 1/2	12 1/4	48 3/4	18 3/4	2 1/4	5 1/2	31	3,143.00
23276	14.96	17	14 1/2	PLB23276	15 1/2	41 1/2	43 1/2	12 1/4	48 3/4	18 3/4	2 1/4	5 1/2	31	3,100.00
23280	15.75	17 1/2	15 1/4	PLB23280	17	44 1/2	46 5/8	14 1/2	52 3/4	22 1/4	2 1/4	5 1/2	34	4,132.00
23284	16.54	18 1/2	15 3/4	PLB23284	18	47 1/8	48 7/8	15	54 1/4	21 5/8	2 1/2	5 3/4	35 3/4	4,636.00
23288	17.32	19 1/2	17	PLB23288	18	47 1/8	48 7/8	15	54 1/4	21 5/8	2 1/2	5 3/4	35 3/4	4,608.00
23292	18.11	20	17 3/4	PLB23292	18	47 1/8	48 7/8	15	54 1/4	21 5/8	2 1/2	5 3/4	35 3/4	4,461.00
23296	18.90	21	18 1/2	PLB23296	20	52 1/2	54	16	60	22	3	6	40	6,362.00

Additional Notes

Please Call 1-866-REXNORD for availability
Lubrication Fitting Tap Size, 1/4" PT
Expansion is 3/8" for all shaft sizes
Multi-labyrinth seals standard
Selection Guide, see Link-Belt Split Spherical Roller Bearing Selection Guide section
Load Ratings & Speed Limits, see Link-Belt Split Spherical Roller Bearing Load Ratings & Speed Limits section

Note: Dimensions subject to change. Certified dimensions of ordered material furnished on request.

22200LB, 22200LBK

Photo Shows an Unmounted Spherical Roller Bearing Unit

Product Features

Cylindrical or Tapered bore
Roller riding retainers
Self aligning
High Capacity
See Features & Benefits for additional info.

Bearing Drawing

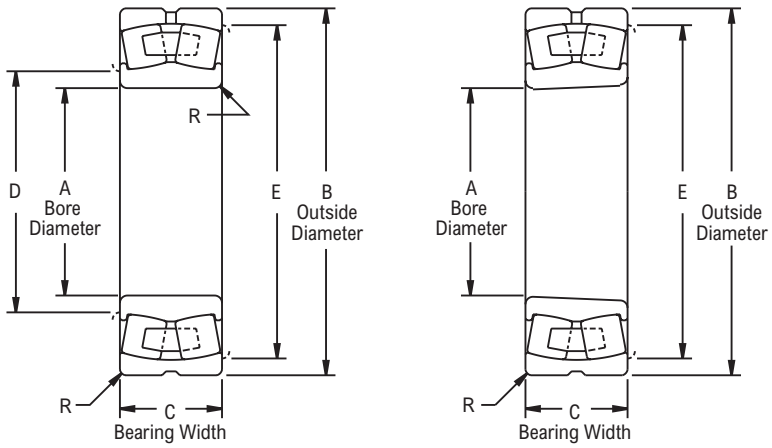

Cylindrical Bore

Tapered Bore

Bearing Dimensions

Cylindrical Part Number	Tapered Part Number	A Bore Diameter	B Outside Diameter	C Bearing Width	D	E	R	Approx. Weight
22209LBC3	22209LBKC3	1.7717	3.3465	0.9055	2.10	3.00	0.039	1.30
22210LBC3	22210LBKC3	1.9685	3.5433		2.30	3.20		1.40
22211LBC3	22211LBKC3	2.1654	3.9370	0.9843	2.60	3.60	0.059	1.90
22212LBC3	22212LBKC3	2.3622	4.3307	1.1024	2.80	4.00		2.60
22213LBC3	22213LBKC3	2.5591	4.7244	1.2205	2.90	4.40		3.40
22214LBC3	22214LBKC3	2.7559	4.9213		3.10	4.60		3.70
22215LBC3	22215LBKC3	2.9528	5.1181		3.30	4.80		3.90
22216LBC3	22216LBKC3	3.1496	5.5118	1.2992	3.50	5.10	0.079	4.90
22217LBC3	22217LBKC3	3.3465	5.9055	1.4173	3.70	5.50		6.10
22218LBC3	22218LBKC3	3.5433	6.2992	1.5748	3.90	5.90		7.60
22219LBC3	22219LBKC3	3.7402	6.6929	1.6929	4.20	6.20		9.50
22220LBC3	22220LBKC3	3.9370	7.0866	1.8110	4.40	6.60		11.40
22222LBC3	22222LBKC3	4.3307	7.8740	2.0866	4.80	7.40		16.60
22224LBC3	22224LBKC3	4.7244	8.4646	2.2835	5.20	8.00		20.20
22226LBC3	22226LBKC3	5.1181	9.0551	2.5197	5.70	8.50	0.098	25.10
22228LBC3	22228LBKC3	5.5118	9.8425	2.6772	6.10	9.30		32.40
22230LBC3	22230LBKC3	5.9055	10.6299	2.8740	6.50	10.10		40.90
22232LBC3	22232LBKC3	6.2992	11.4173	3.1496	6.90	10.90		52.00
22234LBC3	22234LBKC3	6.6929	12.2047	3.3858	7.40	11.50	0.118	64.60
22236LBC3	22236LBKC3	7.0866	12.5984		7.80	11.90		67.40
22238LBC3	22238LBKC3	7.4803	13.3858	3.6220	8.20	12.70		81.90
22240LBC3	22240LBKC3	7.8740	14.1732	3.8583	8.60	13.50		95.00
22244LBC3	22244LBKC3	8.6614	15.7480	4.2520	9.40	15.10		133.00
22248LBC3	22248LBKC3	9.4488	17.3228	4.7244	10.60	16.30	0.157	175.70

Additional Notes

Please call 1-866-REXNORD for availability
Tapered bore, 1:12 on diameter
Dimension "R" is the largest fillet radius that will clear bearing corners
Selection Guide, see Link-Belt Split Spherical Roller Bearings Selection Guide section
Load Ratings & Speed Limits, see Link-Belt Split Spherical Bearings Load Ratings & Speed Limits section
For shaft bearing seat diameters, see Link-Belt Split Spherical Bearings Shaft & Housing Seat Diameters section
Note: Dimensions subject to change. Certified dimensions of ordered material furnished on request.

22300LB, 22300LBK

Photo Shows an Unmounted Spherical Roller Bearing Unit

Product Features

Cylindrical or Tapered bore
Roller riding retainers
Self aligning
Extra high capacity
See Features & Benefits for additional info.

Bearing Drawing

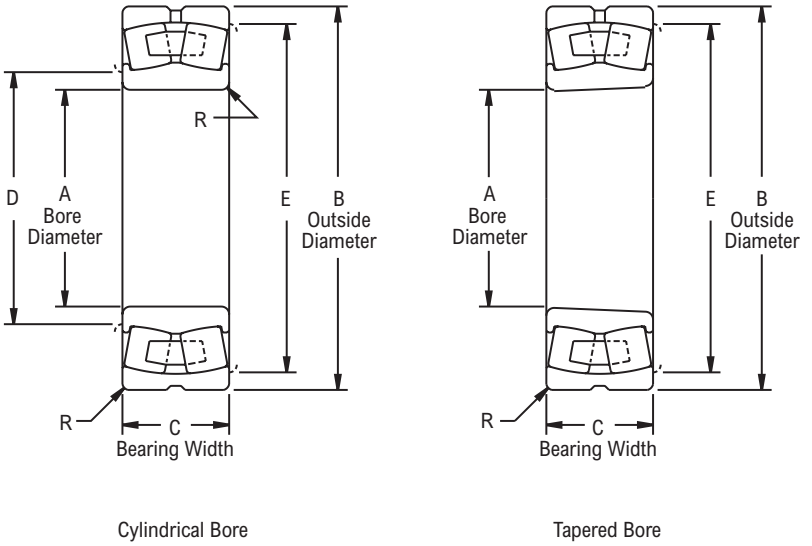

Bearing Dimensions

Cylindrical Part Number	Tapered Part Number	A Bore Diameter	B Outside Diameter	C Bearing Width	D	E	R	Approx. Weight
22308LBC3	22308LBKC3	1.5748	3.5433	1.2992	1.90	3.20	0.059	2.80
22309LBC3	22309LBKC3	1.7717	3.9370	1.4173	2.20	3.60		3.10
22310LBC3	22310LBKC3	1.9685	4.3307	1.5748	2.40	3.90	0.079	4.00
22311LBC3	22311LBKC3	2.1654	4.7244	1.6929	2.60	4.30		5.20
22312LBC3	22312LBKC3	2.3622	5.1181	1.8110	2.90	4.60		6.60
22313LBC3	22313LBKC3	2.5591	5.5118	1.8898	3.10	5.00		7.90
22314LBC3	22314LBKC3	2.7559	5.9055	2.0079	3.30	5.40		9.80
22315LBC3	22315LBKC3	2.9528	6.2992	2.1654	3.50	5.80		11.90
22316LBC3	22316LBKC3	3.1496	6.6929	2.2835	3.70	6.20		14.10
22317LBC3	22317LBKC3	3.3465	7.0866	2.3622	3.90	6.50	0.098	16.30
22318LBC3	22318LBKC3	3.5433	7.4803	2.5197	4.10	6.90		19.50
22319LBC3	22319LBKC3	3.7402	7.8740	2.6378	4.30	7.30		22.60
22320LBC3	22320LBKC3	3.9370	8.4646	2.8740	4.50	7.90		28.90
22322LBC3	22322LBKC3	4.3307	9.4488	3.1496	4.90	8.90		40.00
22324LBC3	22324LBKC3	4.7244	10.2362	3.3858	5.30	9.70		49.00
22326LBC3	22326LBKC3	5.1181	11.0236	3.6614	5.90	10.30	0.118	62.50
22328LBC3	22328LBKC3	5.5118	11.8110	4.0157	6.30	11.10		78.20
22330LBC3	22330LBKC3	5.9055	12.5984	4.2520	6.60	11.90		92.00
22332LBC3	22332LBKC3	6.2992	13.3858	4.4882	7.10	12.70		110.00
22334LBC3	22334LBKC3	6.6929	14.1732	4.7244	7.40	13.50		129.00
22336LBC3	22336LBKC3	7.0866	14.9606	4.9606	7.80	14.30		153.00
22338LBC3	22338LBKC3	7.4803	15.7480	5.1968	8.40	14.90	0.157	176.00
22340LBC3	22340LBKC3	7.8740	16.5354	5.4331	8.80	15.70		200.00
22344LBC3	22344LBKC3	8.6614	18.1102	5.7087	9.60	17.30		287.00
22348LBC3	22348LBKC3	9.4488	19.6850	6.1024	10.70	18.40	0.197	321.90
22356LBC3	22356LBKC3	11.0236	22.8346	6.8898	12.60	21.30	0.236	482.80

Additional Notes

Please call 1-866-REXNORD for availability
Tapered bore, 1:12 on diameter
Dimension "R" is the largest fillet radius that will clear bearing corners
Selection Guide, see Link-Belt Split Spherical Roller Bearings Selection Guide section
Load Ratings & Speed Limits, see Link-Belt Split Spherical Bearings Load Ratings & Speed Limits section
For shaft bearing seat diameters, see Link-Belt Split Spherical Bearings Shaft & Housing Seat Diameters section
Note: Dimensions subject to change. Certified dimensions of ordered material furnished on request.

23000LB, 23000LBK

Photo Shows an Unmounted Spherical Roller Bearing Unit

Product Features

Cylindrical or Tapered bore
Roller riding retainers
Self aligning
Extra high capacity
See Features & Benefits for additional info.

Bearing Drawing

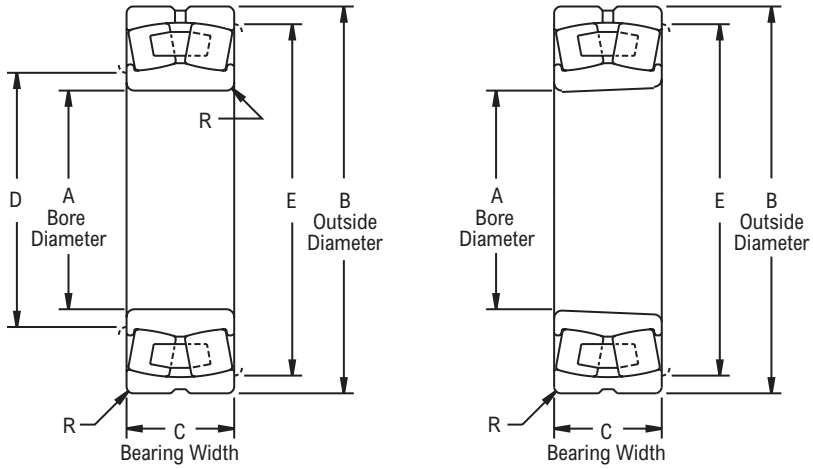

Cylindrical Bore

Tapered Bore

Bearing Dimensions

Cylindrical Part Number	Tapered Part Number	A Bore Diameter	B Outside Diameter	C Bearing Width	D	E	R	Approx. Weight
23044LBC3	23044LBKC3	8.6614	13.3858	3.5433	9.60	12.60	0.12	64.80
23048LBC3	23048LBKC3	9.4488	14.1732	3.6220	10.00	13.60	0.10	74.60
23052LBC3	23052LBKC3	10.2362	15.7480	4.0945	11.40	14.70	0.16	101.90
23056LBC3	23056LBKC3	11.0236	16.5354	4.1732	11.80	15.80	0.12	117.60
23060LBC3	23060LBKC3	11.8110	18.1102	4.6457	13.00	17.00	0.12	163.30
23064LBC3	23064LBKC3	12.5984	18.8976	4.7638	13.90	16.40	0.16	165.10
23068LBC3	23068LBKC3	13.3858	20.4724	5.2362	14.80	19.20	0.20	220.50
23072LBC3	23072LBKC3	14.1732	21.2598	5.2756	15.70	20.00	0.20	231.50
23076LBC3	23076LBKC3	14.9606	22.0472	5.3150	16.50	20.80	0.20	246.90
23080LBC3	23080LBKC3	15.7480	23.6220	5.8268	17.30	22.30	0.20	319.70
23084LBC3	23084LBKC3	16.5354	24.4094	5.9055	18.10	23.10	0.20	330.70
23088LBC3	23088LBKC3	17.3228	25.5906	6.1811	19.20	24.00	0.24	378.40
23092LBC3	23092LBKC3	18.1102	26.7717	6.4173	20.00	25.10	0.24	438.70
23096LBC3	23096LBKC3	18.8976	27.5591	6.4961	20.80	25.90	0.24	463.00
230530LBC3	230530LBKC3	20.8661	30.7087	7.2835	22.90	29.00	0.24	651.20
230560LBC3	230560LBKC3	22.0472	32.2835	7.6772	24.10	30.60	0.24	756.80
230600LBC3	230600LBKC3	23.6220	34.2520	7.8740	25.80	32.50	0.24	855.80
230630LBC3	230630LBKC3	24.8031	36.2205	8.3465	27.30	34.10	0.30	1,029.60

Additional Notes

Please call 1-866-REXNORD for availability
Tapered bore, 1:12 on diameter
Dimension "R" is the largest fillet radius that will clear bearing corners
Selection Guide, see Link-Belt Split Spherical Roller Bearings Selection Guide section
Load Ratings & Speed Limits, see Link-Belt Split Spherical Bearings Load Ratings & Speed Limits section
For shaft bearing seat diameters, see Link-Belt Split Spherical Bearings Shaft & Housing Seat Diameters section Guide section
Note: Dimensions subject to change. Certified dimensions of ordered material furnished on request.

23100LB, 23100LBK

Photo Shows an Unmounted Spherical Roller Bearing Unit

Product Features

Cylindrical or Tapered bore
Roller riding retainers
Self aligning
High Capacity
See Features & Benefits for additional info.

Bearing Drawing

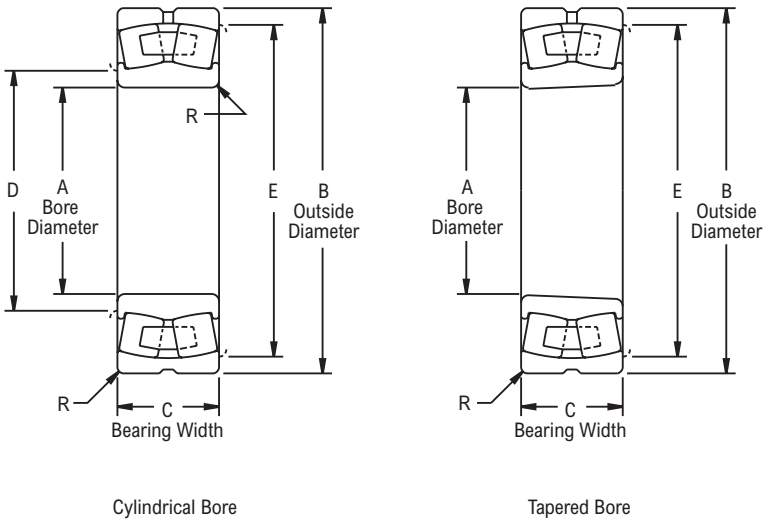

Bearing Dimensions

Cylindrical Part Number	Tapered Part Number	A Bore Diameter	B Outside Diameter	C Bearing Width	D	E	R	Approx. Weight
23144LBC3	23144LBKC3	8.6614	14.5669	4.7244	9.80	13.50	0.16	116.00
23148LBC3	23148LBKC3	9.4488	15.7480	5.0394	10.60	14.70	0.16	142.00
23152LBC3	23152LBKC3	10.2362	17.3228	5.6693	11.40	16.30	0.16	193.10
23156LBC3	23156LBKC3	11.0236	18.1102	5.7480	12.40	16.90	0.20	206.30
23160LBC3	23160LBKC3	11.8110	19.6850	6.2992	13.20	18.40	0.20	273.40
23164LBC3	23164LBKC3	12.5984	21.2598	6.9291	14.00	20.00	0.20	354.90
23168LBC3	23168LBKC3	13.3858	22.8346	7.4803	14.80	21.50	0.20	451.90
23172LBC3	23172LBKC3	14.1732	23.6220	7.5591	15.70	20.00	0.20	474.00
23176LBC3	23176LBKC3	14.9606	24.4094	7.6378	16.50	23.10	0.20	500.40
23180LBC3	23180LBKC3	15.7480	25.5905	7.8740	17.60	24.00	0.24	564.40
23184LBC3	23184LBKC3	16.5354	27.5591	8.8189	18.30	25.90	0.24	745.10
23188LBC3	23188LBKC3	17.3228	28.3465	8.8976	19.20	26.70	0.24	789.20
23192LBC3	23192LBKC3	18.1102	29.9213	9.4488	20.30	27.90	0.30	925.90
23196LBC3	23196LBKC3	18.8976	31.1024	9.7638	21.10	29.10	0.30	1,040.60
231530LBC3	231530LBKC3	20.8661	34.2520	10.7087	23.20	32.20	0.30	1,381.60
231560LBC3	231560LBKC3	22.0472	36.2205	11.0236	24.40	34.10	0.30	1,599.40
231600LBC3	231600LBKC3	23.6220	38.5827	11.8110	26.10	36.40	0.30	1,975.60
231630LBC3	231630LBKC3	24.8031	40.5512	12.4016	27.30	38.30	0.30	2,288.00

Additional Notes

Please call 1-866-REXNORD for availability
Tapered bore, 1:12 on diameter
Dimension "R" is the largest fillet radius that will clear bearing corners
Selection Guide, see Link-Belt Split Spherical Roller Bearings Selection Guide section
Load Ratings & Speed Limits, see Link-Belt Split Spherical Bearings Load Ratings & Speed Limits section
For shaft bearing seat diameters, see Link-Belt Split Spherical Bearings Shaft & Housing Seat Diameters section Guide section
Note: Dimensions subject to change. Certified dimensions of ordered material furnished on request.

23200LB, 23200LBK

Photo Shows an Unmounted Spherical Roller Bearing Unit

Product Features

Cylindrical or Tapered bore
Roller riding retainers
Self aligning
High Capacity
See Features & Benefits for additional info.

Bearing Drawing

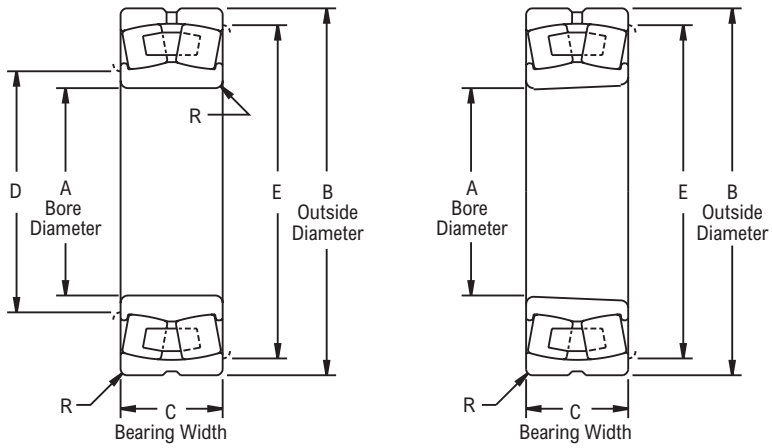

Cylindrical Bore

Tapered Bore

Bearing Dimensions

Cylindrical Part Number	Tapered Part Number	A Bore Diameter	B Outside Diameter	C Bearing Width	D	E	R	Approx. Weight
23244LBC3	23244LBKC3	8.6614	15.7480	5.6693	9.80	14.70	0.16	175.70
23248LBC3	23248LBKC3	9.4488	17.3228	6.2992	10.60	16.30		231.50
23252LBC3	23252LBKC3	10.2362	18.8976	6.8504	11.60	17.60	0.20	297.60
23256LBC3	23256LBKC3	11.0236	19.6850	6.9291	12.40	18.40		319.70
23260LBC3	23260LBKC3	11.8110	21.2598	7.5591	13.20	20.00		414.50
23264LBC3	23264LBKC3	12.5984	22.8346	8.1890	14.00	21.50		522.50
23268LBC3	23268LBKC3	13.3858	24.4094	8.8189	15.10	22.80	0.24	643.70
23272LBC3	23272LBKC3	14.1732	25.5905	9.1339	15.90	24.00		727.50
23276LBC3	23276LBKC3	14.9606	26.7717	9.4488	16.70	25.10		813.50
23280LBC3	23280LBKC3	15.7480	28.3465	10.0787	17.60	26.70		983.20
23284LBC3	23284LBKC3	16.5354	29.9213	10.7087	18.70	27.90	0.30	1,170.60
23288LBC3	23288LBKC3	17.3228	31.1024	11.0236	19.50	29.10		1,298.50
23292LBC3	23292LBKC3	18.1102	32.6772	11.6535	20.30	30.60		1,511.40
23296LBC3	23296LBKC3	18.8976	34.2520	12.2047	21.10	32.20		1,742.40

Additional Notes

Please call 1-866-REXNORD for availability
Tapered bore, 1:12 on diameter
Dimension "R" is the largest fillet radius that will clear bearing corners
Selection Guide, see Link-Belt Split Spherical Roller Bearings Selection Guide section
Load Ratings & Speed Limits, see Link-Belt Split Spherical Bearings Load Ratings & Speed Limits section
For shaft bearing seat diameters, see Link-Belt Split Spherical Bearings Shaft & Housing Seat Diameters section Guide section
Note: Dimensions subject to change. Certified dimensions of ordered material furnished on request.

23900LB, 23900LBK

Photo Shows an Unmounted Spherical Roller Bearing Unit

Product Features

Cylindrical or Tapered bore
Roller riding retainers
Self aligning
High Capacity
See Features & Benefits for additional info.

Bearing Drawing

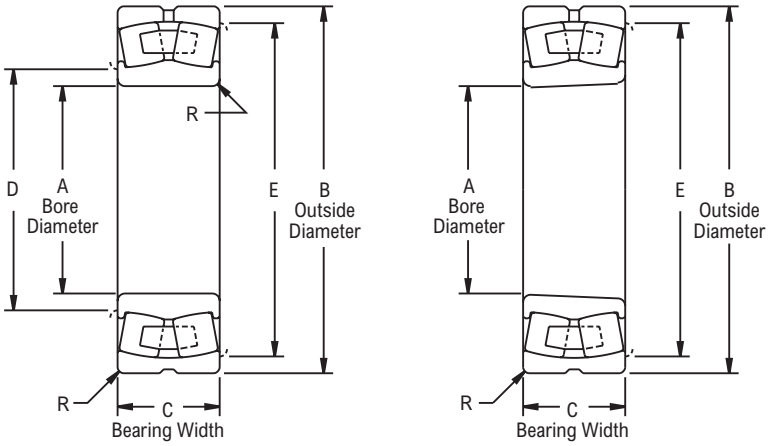

Cylindrical Bore

Tapered Bore

Bearing Dimensions

Cylindrical Part Number	Tapered Part Number	A Bore Diameter	B Outside Diameter	C Bearing Width	D	E	R	Approx. Weight
23944LBC3	23944LBKC3	8.6614	11.8110	2.3622	9.50	11.10	0.08	26.70
23948LBC3	23948LBKC3	9.4488	12.5984		10.40	11.90		28.90

Additional Notes

Please call 1-866-REXNORD for availability
Tapered bore, 1:12 on diameter
Dimension "R" is the largest fillet radius that will clear bearing corners
Selection Guide, see Link-Belt Split Spherical Roller Bearings Selection Guide section
Load Ratings & Speed Limits, see Link-Belt Split Spherical Bearings Load Ratings & Speed Limits section
For shaft bearing seat diameters, see Link-Belt Split Spherical Bearings Shaft & Housing Seat Diameters section Guide section
Note: Dimensions subject to change. Certified dimensions of ordered material furnished on request.

PLB2300K Spherical Roller Bearing Unit Replacement Parts

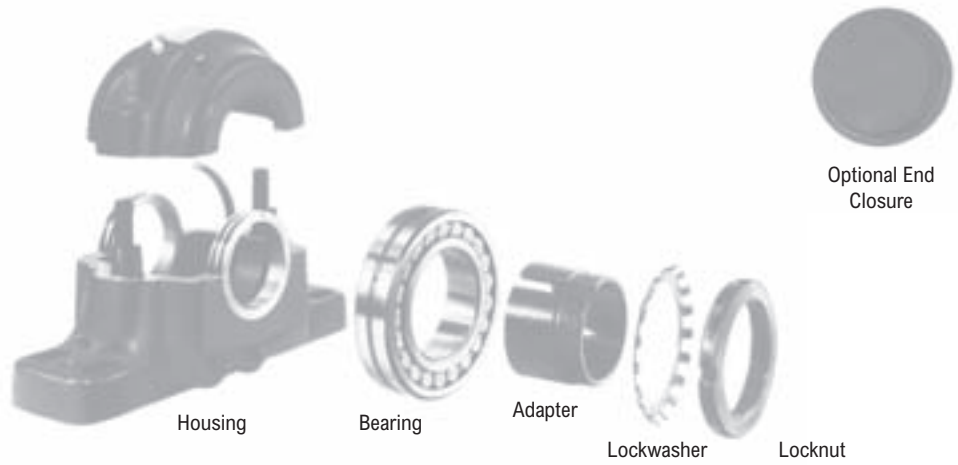

Part Numbers

Shaft Diameter	Part Number	Bearing Insert	Adapter Assy	Housing Part Number
7 15/16	PLB23044K71516	23044LBKC3	H3044127	PLB044K7151602
8	PLB23044K8	23044LBKC3	SNW30448	PLB044K802
8 1/2	PLB23048K812	23048LBKC3	SNP3048812	PLB048K81202
8 15/16	PLB23048K81516	23048LBKC3	SNP30481516	PLB048K8151602
9	PLB23048K9	23048LBKC3	SNP30489	PLB048K902
9 7/16	PLB23052K9716	23052LBKC3	SNP30529716	PLB052K971602
9 1/2	PLB23052K912	23052LBKC3	SNP30529716	PLB052K91202
9 15/16	PLB23056K91516	23056LBKC3	SNP305691516	PLB056K9151602
10	PLB23056K10	23056LBKC3	SNP305610	PLB056K1002
10 7/16	PLB23056K10716	23056LBKC3	SNP305610716	PLB056K1071602
10 15/16	PLB23060K101516	23060LBKC3	SNP3060101516	PLB3060K10151602
11	PLB23060K11	23060LBKC3	SNP3060101516	PLB3060K1102
11 15/16	PLB23064K111516	23064LBKC3	SNP3064111516	PLB3064K11151602
12	PLB23064K12	23064LBKC3	SNP306412	PLB3064K1202
12 1/2	PLB23068K1212	23068LBKC3	SNP30681212	PLB3068K121202
12 15/16	PLB23072K121516	23072LBKC3	SNP3072121516	PLB3072K12151602
13	PLB23072K13	23072LBKC3	SNP307213	PLB3072K1302
13 15/16	PLB23076K131516	23076LBKC3	SNP3076131516	PLB3076K13151602
14	PLB23076K14	23076LBKC3	SNP307614	PLB3076K1402
15	PLB23080K15	23080LBKC3	SNP308015	PLB3080K1502
15 3/4	PLB23084K1534	23084LBKC3	SNP30841534	PLB3084K153402
16 1/2	PLB23088K1612	23088LBKC3	SNP30881612	PLB3088K161202
17	PLB23092K17	23092LBKC3	SNP309217	PLB3092K1702
18	PLB23096K18	23096LBKC3	SNP309618	PLB3096K1802
19 1/2	PLB230530K1912	230530LBKC3	SNP305301912	PLB30530K191202
21	PLB230560K21	230560LBKC3	SNP3056021	PLB30560K2102
22	PLB230600K22	230600LBKC3	SNP3060022	PLB30600K2202
24	PLB230630K24	230630LBKC3	SNP3063024	PLB30630K2402

Additional Notes

Housing part numbers listed above include seals and C-Spacer ring.

PLB23000 Spherical Roller Bearing Unit Replacement Parts

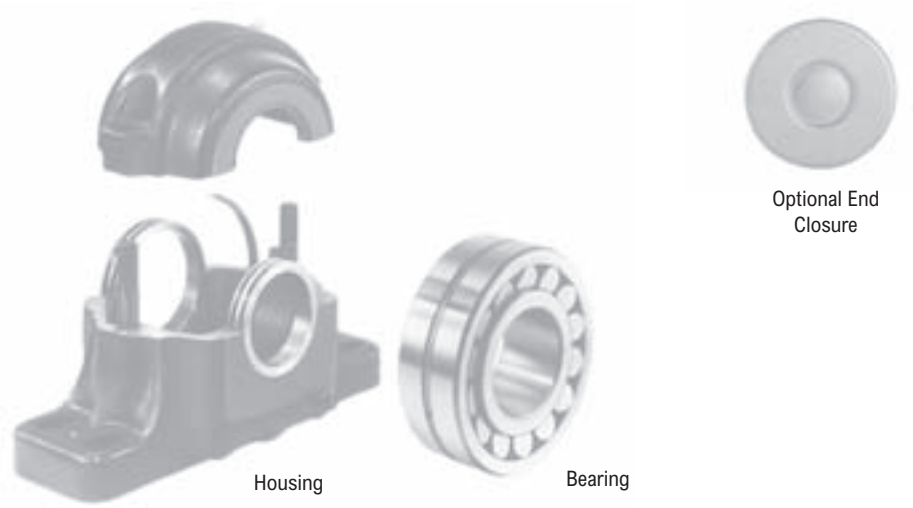

Bearing Dimensions

Shaft Diameter	Part Number	Bearing Insert	Housing Part Number
8.6614	PLB23044	23044LBC3	PLB04402
9.4488	PLB23048	23048LBC3	PLB04802
10.2362	PLB23052	23052LBC3	PLB05202
11.0236	PLB23056	23056LBC3	PLB05602
11.8110	PLB23060	23060LBC3	PLB306002
12.5984	PLB23064	23064LBC3	PLB306402
13.3858	PLB23068	23068LBC3	PLB306802
14.1732	PLB23072	23072LBC3	PLB307202
14.9606	PLB23076	23076LBC3	PLB307602
15.7480	PLB23080	23080LBC3	PLB308002
16.5354	PLB23084	23084LBC3	PLB308402
17.3228	PLB23088	23088LBC3	PLB308802
18.1102	PLB23092	23092LBC3	PLB309202
18.8976	PLB23096	23096LBC3	PLB309602
20.8661	PLB230530	230530LBC3	PLB3053002
22.0472	PLB230560	230560LBC3	PLB3056002

Additional Notes

Housing part numbers listed above include seals and C-Spacer ring.

PLB23100K Spherical Roller Bearing Unit Replacement Parts

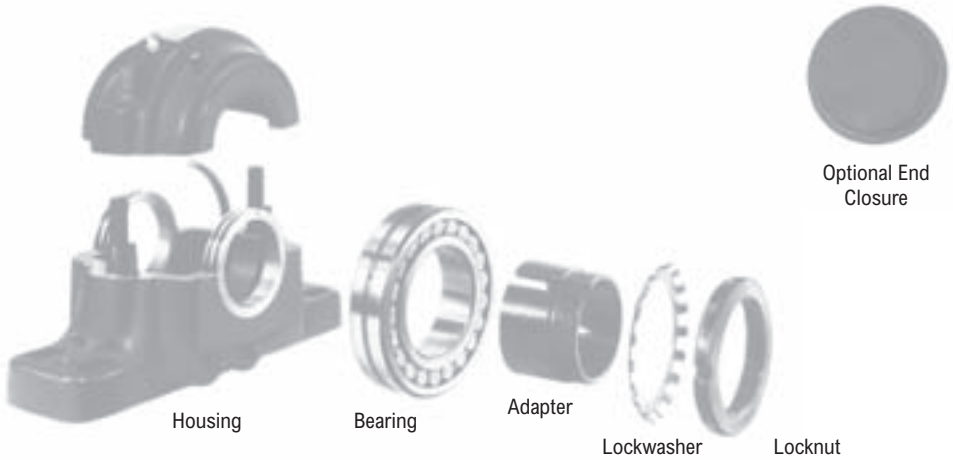

Part Numbers

Shaft Diameter	Part Number	Bearing Insert	Adapter Assy	Housing Part Number
8	PLB23144K8	23144LBKC3	SNW30448	PLB3144K802
8 15/16	PLB23148K81516	23148LBKC3	SNP314881516	PLB3148K8151602
9 7/16	PLB23152K9716	23152LBKC3	SNP31529716	PLB3152K971602
10 7/16	PLB23156K10716	23156LBKC3	SNP315610716	PLB3156K1071602
10 15/16	PLB23160K101516	23160LBKC3	SNP3160101516	PLB3160K10151602
11 15/16	PLB23164K111516	23164LBKC3	SNP3164111516	PLB3164K11151602
12 7/16	PLB23168K12716	23168LBKC3	SNP316812716	PLB3168K1271602
13 7/16	PLB23172K13716	23172LBKC3	SNP317213716	PLB3172K1371602
13 15/16	PLB23176K131516	23176LBKC3	SNP3176131516	PLB3176K13151602
15	PLB23180K15	23180LBKC3	SNP318015	PLB3180K1502
15 3/4	PLB23184K1534	23184LBKC3	SNP31841534	PLB3184K153402
16 1/2	PLB23188K1612	23188LBKC3	SNP31881612	PLB3188K161202
17	PLB23192K17	23192LBKC3	SNP319217	PLB3192K1702
18	PLB23196K18	23196LBKC3	SNP319618	PLB3196K1802
19 1/2	PLB231530K1912	231530LBKC3	SNP315301912	PLB31530K191202
21	PLB231560K21	231560LBKC3	SNP3156021	PLB31560K2102

Additional Notes

Housing part numbers listed above include seals and C-Spacer ring.

PLB23100 Spherical Roller Bearing Unit Replacement Parts

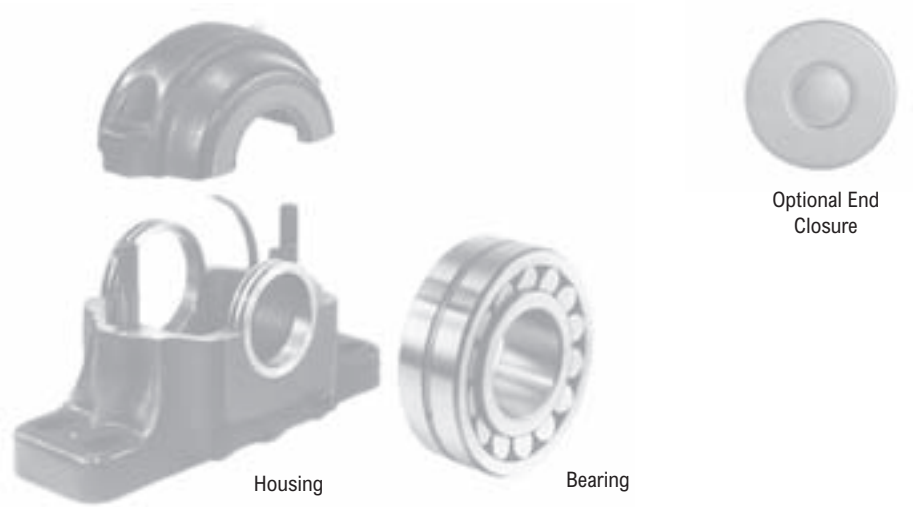

Bearing Dimensions

Shaft Diameter	Part Number	Bearing Insert	Housing Part Number
8.6614	PLB23144	23144LBC3	PLB314402
9.4488	PLB23148	23148LBC3	PLB314802
10.2362	PLB23152	23152LBC3	PLB315202
11.0236	PLB23156	23156LBC3	PLB315602
11.8110	PLB23160	23160LBC3	PLB316002
12.5984	PLB23164	23164LBC3	PLB316402
13.3858	PLB23168	23168LBC3	PLB316802
14.1732	PLB23172	23172LBC3	PLB317202
14.9606	PLB23176	23176LBC3	PLB317602
15.7480	PLB23180	23180LBC3	PLB318002
16.5354	PLB23184	23184LBC3	PLB318402
17.3228	PLB23188	23188LBC3	PLB318802
18.1102	PLB23192	23192LBC3	PLB319202
18.8976	PLB23196	23196LBC3	PLB319602
20.8661	PLB231530	231530LBC3	PLB3153002
22.0472	PLB231560	231560LBC3	PLB3156002

Additional Notes

Housing part numbers listed above include seals and C-Spacer ring.

PLB23200K Spherical Roller Bearing Unit Replacement Parts

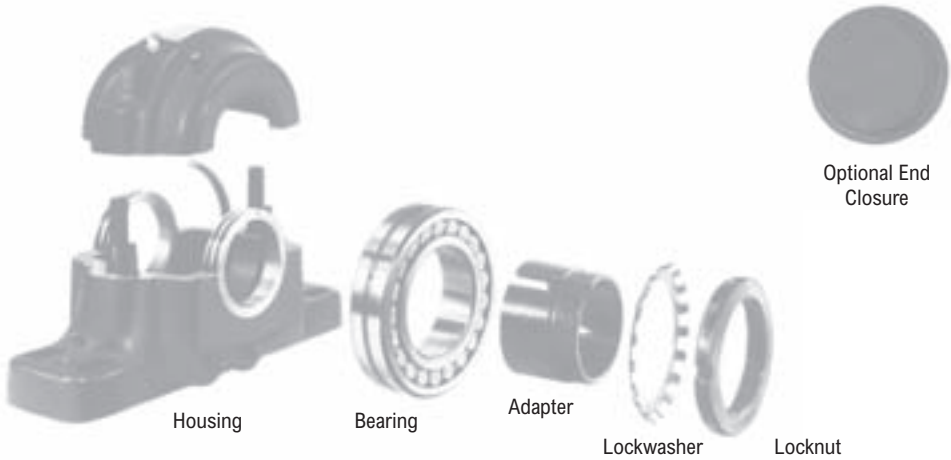

Part Numbers

Shaft Diameter	Part Number	Bearing Insert	Adapter Assy	Housing Part Number
8	PLB23244K8	23244LBKC3	SNW1448	PLB3244K802
8 15/16	PLB23248K81516	23248LBKC3	SNP14881516	PLB3248K8151602
9 7/16	PLB23252K9716	23252LBKC3	SNP1529716	PLB3252K971602
10 7/16	PLB23256K10716	23256LBKC3	SNP325610716	PLB3256K1071602
10 15/16	PLB23260K101516	23260LBKC3	SNP3260101516	PLB3260K10151602
11 15/16	PLB23264K111516	23264LBKC3	SNP3264111516	PLB3264K11151602
12 7/16	PLB23268K12716	23268LBKC3	SNP326812716	PLB3268K1271602
13 7/16	PLB23272K13716	23272LBKC3	SNP327213716	PLB3272K1371602
13 15/16	PLB23276K131516	23276LBKC3	SNP3276131516	PLB3276K13151602
15	PLB23280K15	23280LBKC3	SNP328015	PLB3280K1502
15 3/4	PLB23284K1534	23284LBKC3	SNP32841534	PLB3284K153402
16 1/2	PLB23288K1612	23288LBKC3	SNP32881612	PLB3288K161202
17	PLB23292K17	23292LBKC3	SNP329217	PLB3292K1702
18	PLB23296K18	23296LBKC3	SNP329618	PLB3296K1802

Additional Notes

Housing part numbers listed above include seals and C-Spacer ring.

PLB23200 Spherical Roller Bearing Unit Replacement Parts

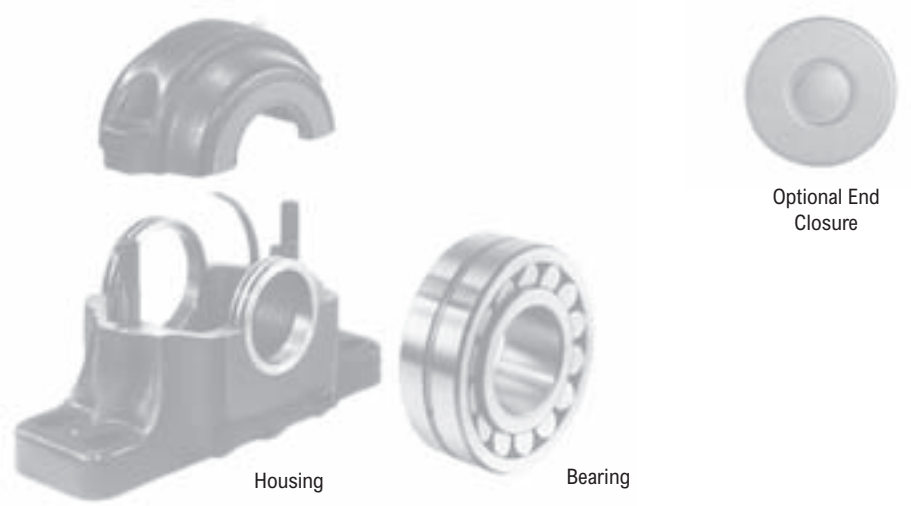

Bearing Dimensions

Shaft Diameter	Part Number	Bearing Insert	Housing Part Number
8.6614	PLB23244	23244LBC3	PLB324402
9.4488	PLB23248	23248LBC3	PLB324802
10.2362	PLB23252	23252LBC3	PLB325202
11.0236	PLB23256	23256LBC3	PLB325602
11.8110	PLB23260	23260LBC3	PLB326002
12.5984	PLB23264	23264LBC3	PLB326402
13.3858	PLB23268	23268LBC3	PLB326802
14.1732	PLB23272	23272LBC3	PLB327202
14.9606	PLB23276	23276LBC3	PLB327602
15.7480	PLB23280	23280LBC3	PLB328002
16.5354	PLB23284	23284LBC3	PLB328402
17.3228	PLB23288	23288LBC3	PLB328802
18.1102	PLB23292	23292LBC3	PLB329202
18.8976	PLB23296	23296LBC3	PLB329602

Additional Notes

Housing part numbers listed above include seals and C-Spacer ring.

www.rexnord.com

Rexnord Industries, LLC, 7601 Rockville Road, Indianapolis, IN 46214-3120 USA
Phone: 317-273-5500 Fax: 317-273-5620

REXNORD

World Class Customer Service

For more than 100 years, the dedicated people of Rexnord have delivered excellence in quality and service to our customers around the globe. Rexnord is a trusted name when it comes to providing skillfully engineered products that improve productivity and efficiency for industrial applications worldwide. We are committed to exceeding customer expectations in every area of our business: product design, application engineering, operations, and customer service.

Because of our customer focus, we are able to thoroughly understand the needs of your business and have the resources available to work closely with you to reduce maintenance costs, eliminate redundant inventories and prevent equipment down time.

Rexnord represents the most comprehensive portfolio of power transmission and conveying components in the world with the brands you know and trust.

WORLDWIDE CUSTOMER SERVICE

AUSTRALIA
Rexnord Australia Pty. Ltd.
Picton, New South Wales
Phone: 61-2-4677-3811
Fax: 61-2-4677-3812

Falk-Rexnord Australia Pty Ltd
Broadmeadow New South Wales
Phone: 61-2-4962-8000
Fax: 61-2-4962-8001

BRAZIL
Rexnord Correntes Ltda.
Sao Leopoldo - RS
Phone: 55-51-579-8022
Fax: 55-51-579-8029

CANADA
Rexnord Canada Ltd.
Scarborough, Ontario
Phone: 1-416-297-6868
Fax: 1-416-297-6873

CHINA
Rexnord China
Shanghai, China
Phone: 86-21-62701942
Fax: 86-21-62701943

EUROPE
Rexnord NV/SA
Mechelen, Belgium
Phone: 32-15-443881
Fax: 32-15-443860

LATIN AMERICA
Rexnord International
Milwaukee, Wisconsin
Phone: 1-414-643-2366
Fax: 1-414-643-3222
E-mail: international1@rexnord.com

MEXICO
Rexnord S. A. de C. V.
Mexico DF, Mexico
Phone: 52-55-9140-3500
Fax: 52-55-9140-3550

SINGAPORE
Rexnord International, Inc.
Singapore City, Singapore
Phone: 65-6338-5622
Fax: 65-6338-5422

UNITED STATES
Customer Service
Phone: 866-Rexnord
(866-739-6673)
E-mail: rexnordcs(state)@rexnord.com
Example: rexnordcsohio@rexnord.com

ALL COUNTRIES NOT LISTED ABOVE
Rexnord International
Milwaukee, Wisconsin
Phone: 1-414-643-2366
Fax: 1-414-643-3222
E-mail: international2@rexnord.com

REXNORD

090703 7/2009